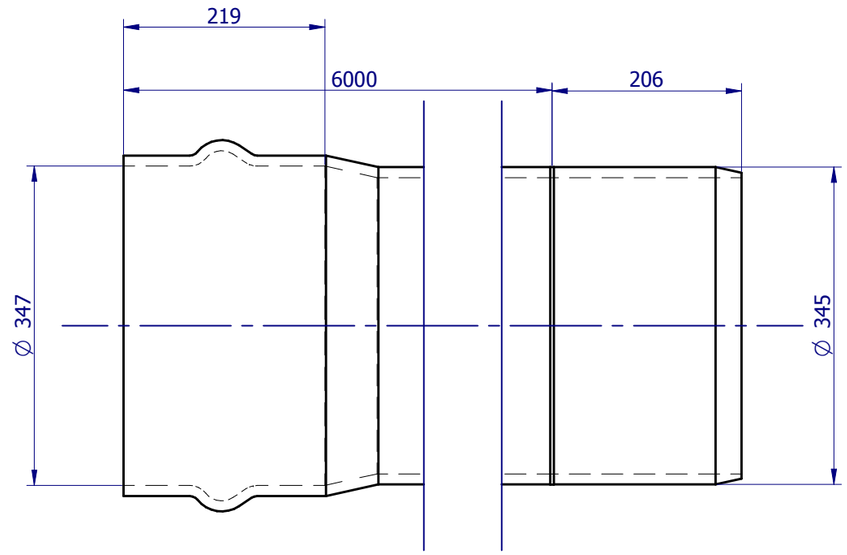

REVISIONS			
A	INITIAL RELEASE.	XX-XX-18	M.H.
REV	DESCRIPTION	DATE	APPROVED

UNLESS OTHERWISE STATED

NOM = Nominal
O/A = Overall
TYP = Typical
C/O = Clear Opening

All measures in millimeters.

This drawing and all information contained thereon are the exclusive property of Iplex Pipelines Pty Ltd. Unless specifically noted, this drawing and items shown on this drawing are subject to change at any time and without prior notice.

Measures are for reference purpose only.

© IPLEX PIPELINES PTY LTD

1300 0 IPLEX (47539)
www.iplex.com.au
info@iplexpipelines.com.au

iPLEX Pipelines

THIRD ANGLE PROJECTION

MASS: 103.983 kg
MATERIAL: PVC
A3 - NTS
Sheet 1 of 1

DESCRIPTION: DN300 x 6m PN12 Purple Rhino® Series 2 PVC-M Pipe Rieber RRJ

CODE: PDHRL12300

REV: A