COMMERCIAL IN CONFIDENCE

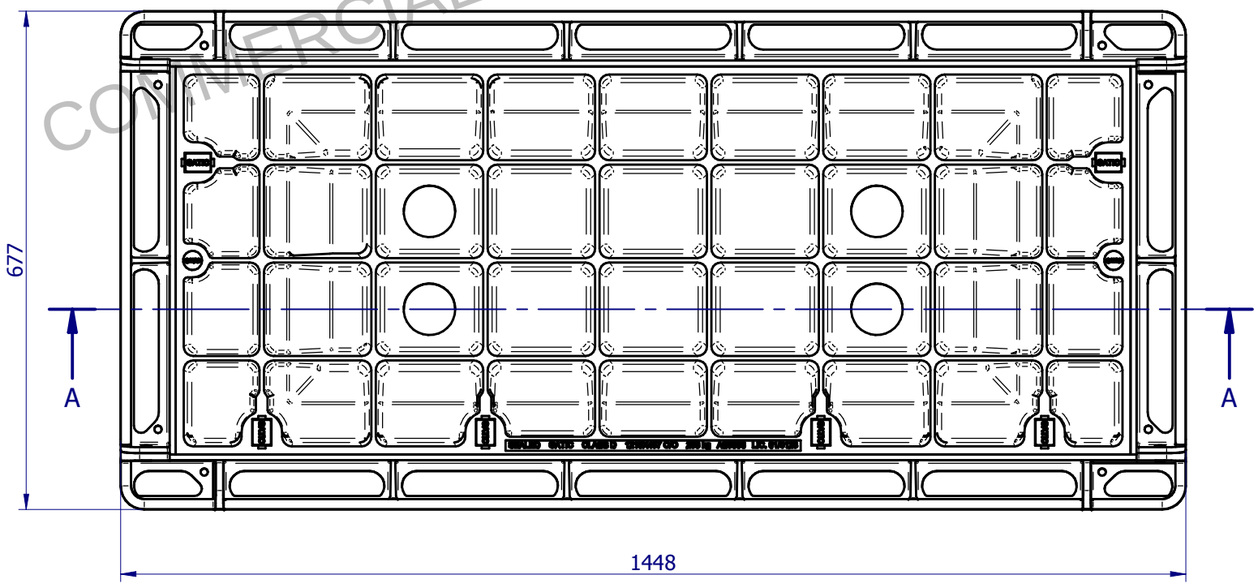

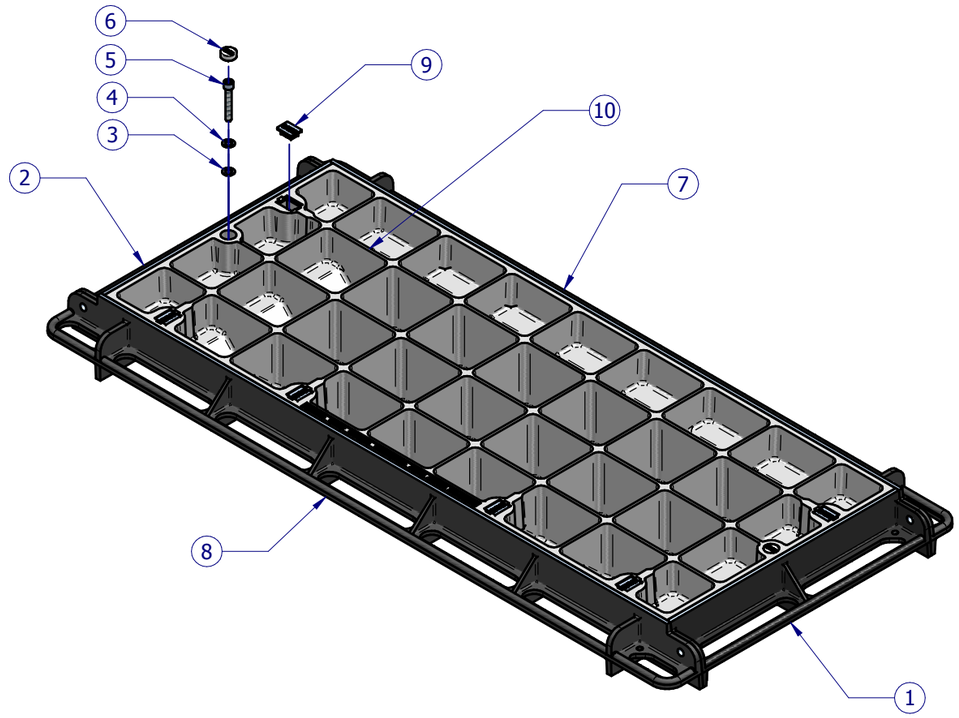

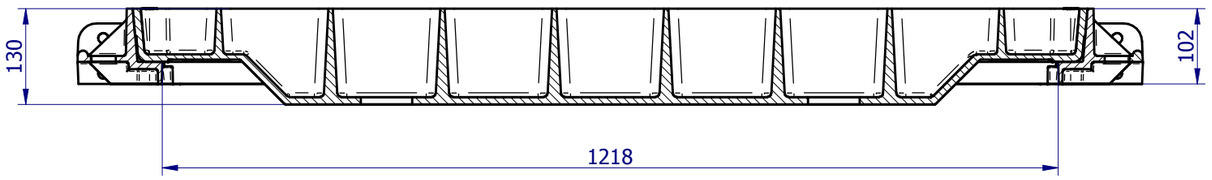

SECTION A-A

Item	DWG	Rev	Title	Material	Qty	Mass
1	4002	C	527 mm RH Side Bar	Ductile Iron 500 - 7	1	7.7
2	4001	C	527 mm LH Side Bar	Ductile Iron 500-7	1	7.7
3	2856	A	M10 Washer	Nylon, general purpose	2	0.0
4	2855	A	M10 Washer	Stainless Steel, 304	2	0.0
5	2857	A	M10x65 Socket Head Cap Bolt	Stainless Steel, 304	2	0.1
6	2854	C	Plastic Plug Ø26 mm	UV Stabilized Nylon	2	0.0
7	4022	B	1298 mm UC Bar	Ductile Iron 500-7	1	16.1
8	4021	B	1298 mm DC Bar	Ductile Iron 500-7	1	19.4
9	1681	A	Plastic Keyhole Plug	UV Stabilized Nylon	6	0.0
10	1206	C	1218x457 C/O Concrete Infill Cover Class D	Ductile Iron 500 - 7	1	137.7

REVISION

No	DATE	DESCRIPTION	BY	CKD.
C	26-05-17	FRAME COMPONENTSA CHANGED.	S.S.	S.S.
B	28-05-13	ASSEMBLY UPDATED.	S.S.	S.S.
A	04-01-11	INITIAL RELEASE	S.S.	S.S.

UNLESS OTHERWISE STATED
ALL MEASURES IN MILIMETERS.
GENERAL CAST TOLERANCES:
CT9 to ISO 8062.
CASTING RADII: 3 mm
DRAFT TAPERS: 2°

LINEAR MACHINING TOLERANCE:
X. ±0.25 mm
X.X ±0.10 mm

ANGULAR MACHINING TOLERANCE:
X. ±0.5°
X.X ±0.1°

NOM = Nominal; O/A = Overall; TYP = Typical; C/O = Clear Opening

FINISH: ALL CAST SURFACES TO BE PAINTED AS SPECIFIED.
FABRICATED COMPONENTS TO BE HOT DIP GALVANISED TO AS4680.
LIGHT FILM OF GATIC SEALING GREASE TO BE APPLIED ON ALL MACHINED SURFACES.

GATIC PTY LTD
9-15 Radford Road, PO Box 312, Reservoir VIC. 3073
Ph- 03 9316 2666 Fax- 03 9315 0099 www.gatic.com.au

THIRD ANGLE PROJECTION

	BY	DATE
DESIGNED:	-	-
DRAWN:	S.S.	04-01-11
CHECKED:	S.S.	04-01-11
APPROVED:	H.B.	04-01-11

CODE: GM301C1245D
SCALE: N.T.S.
FORMAT: A3
SHEET: 1 of 1

TITLE: 1218x457 C/O CONCRETE INFILL COVER CLASS D 210 kN
MATERIAL:
MASS: 182.6 kg
DRG. No: 1207
REV: C

© Copyright : Gatic Pty Ltd - 2013