COMMERCIAL - IN CONFIDENCE

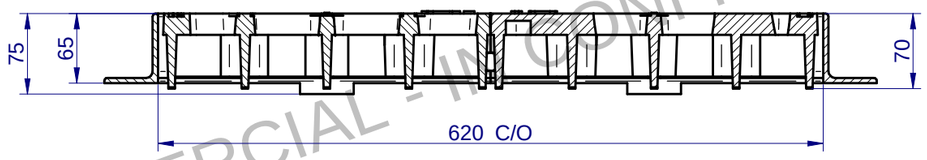

SECTION A-A

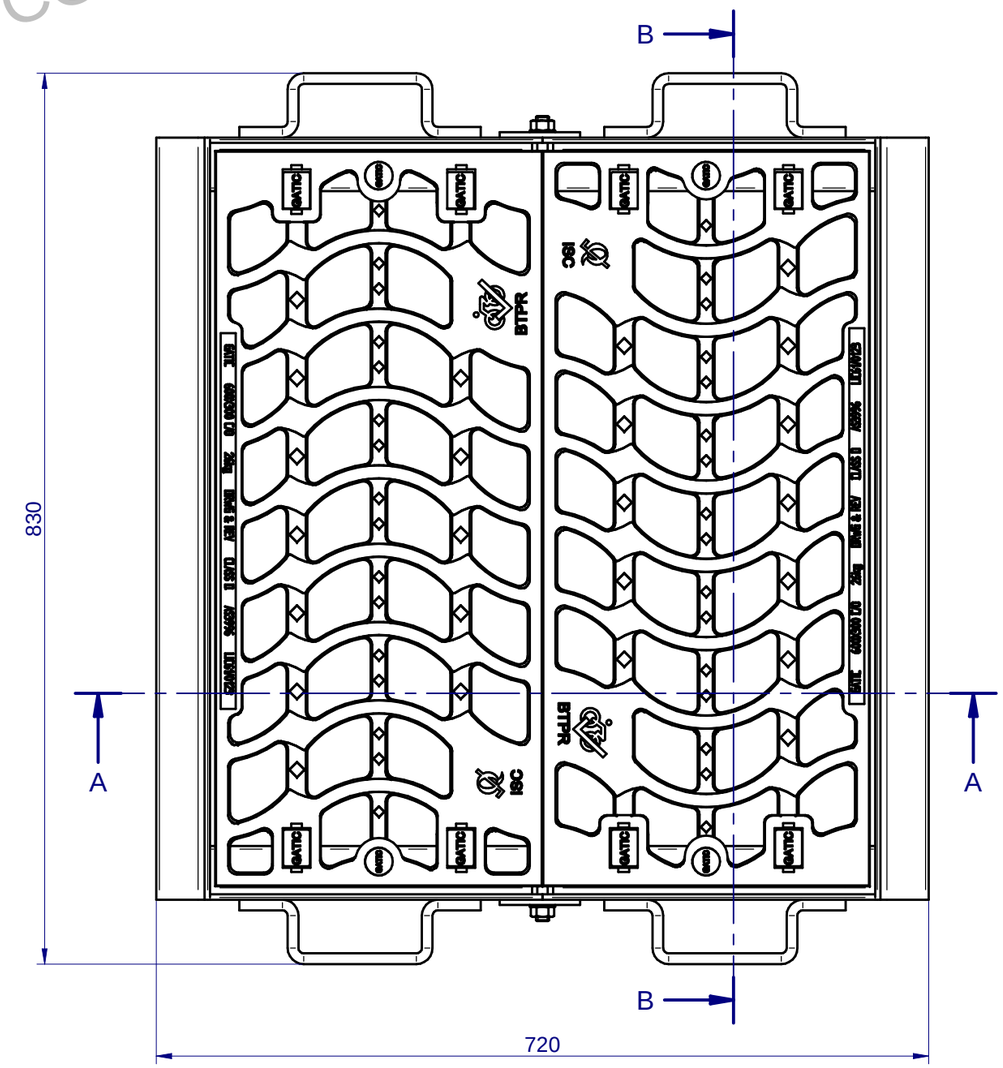

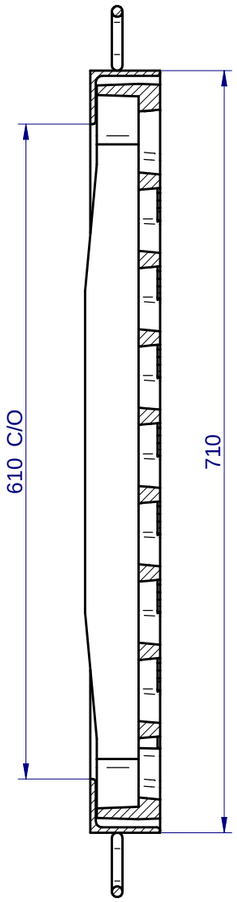

SECTION B-B

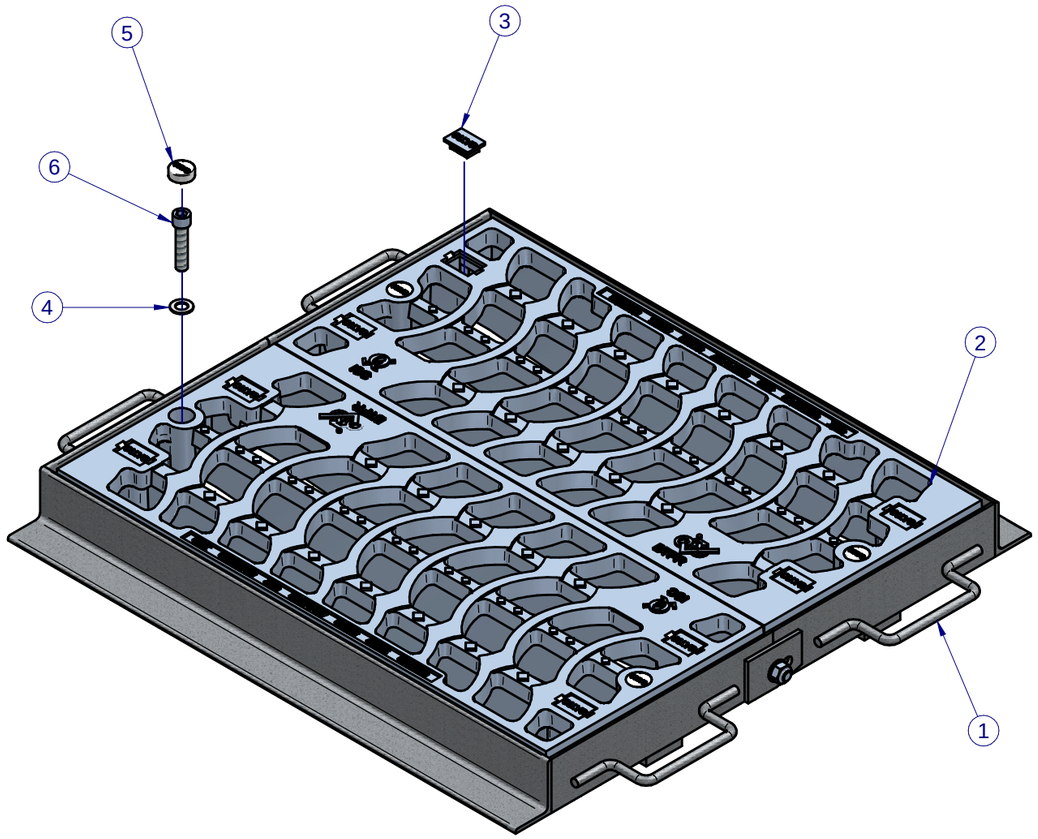

GM325V66DGAL						
Item No.	Document No.	Rev.	Title	Material	Qty	Mass
1	4534	B	600x600 C/O Frame Assembly Class D	-	1	13.4 kg
2	4540	C	600x300 C/O GalvaGrate ClassD	Ductile Iron 500-7	2	50.6 kg
3	1681	A	Plastic Keyhole Plug	UV Stabilized Nylon	8	0.0 kg
4	2923	A	M12 Washer	Stainless Steel, 304	4	0.0 kg
5	2854	C	Plastic Plug Ø26 mm	UV Stabilized Nylon	4	0.0 kg
6	3491	A	M12x55 Socket Head Cap Bolt	Stainless Steel, 304	4	0.3 kg

REVISION

No	DATE	DESCRIPTION	BY	CKD.
C	03-05-18	BOLT DOWN DETAILS CHANGED ON GRATE AND FRAME	F.M.	M.B.
B	13-11-12	ITEM #2 REVISED, TABLE UPDATED.	F.M.	S.S.
A	15-08-12	INITIAL RELEASE.	S.F.	S.S.

UNLESS OTHERWISE STATED
ALL MEASURES IN MILIMETERS.
GENERAL CAST TOLERANCES:
CT9 to ISO 8062.
CASTING RADII: 3 mm
DRAFT TAPERS: 2°

LINEAR MACHINING TOLERANCE:
X. ±0.25 mm
X.X ±0.10 mm
ANGULAR MACHINING TOLERANCE:
X. ±0.5°
X.X ±0.1°

NOM = Nominal; O/A = Overall; TYP = Typical; C/O = Clear Opening

FINISH: ALL CAST SURFACES TO BE PAINTED AS SPECIFIED. FABRICATED COMPONENTS TO BE HOT DIP GALVANISED TO AS/NZS 4680. LIGHT FILM OF GATIC SEALING GREASE TO BE APPLIED ON ALL MACHINED SURFACES.

GATIC PTY LTD
9-15 Radford Road, PO Box 312, Reservoir VIC. 3073
Ph- 03 9316 2666 Fax- 03 9315 0099 www.gatic.com.au

THIRD ANGLE PROJECTION

	BY	DATE
DESIGNED:	S.F.	15-08-12
DRAWN:	S.F.	15-08-12
CHECKED:	S.S.	15-08-12
APPROVED:	H.B.	15-08-12

CODE: GM325V66DGAL
SCALE: N.T.S.
FORMAT: A3
SHEET: 1 of 1

TITLE: 610 x 620mm C/O GALVAGRATE & FRAME ASSEMBLY CLASS D
MATERIAL: --
MASS: 64.3 kg
DRG. No: 4541
REV: C

© Copyright : Gatic Pty Ltd - 2018