NOTE:

8 ONLY OF M10x50 BOLTS REQUIRED FOR ASSEMBLY C/W WASHERS AND NUTS

COMMERCIAL IN CONFIDENCE

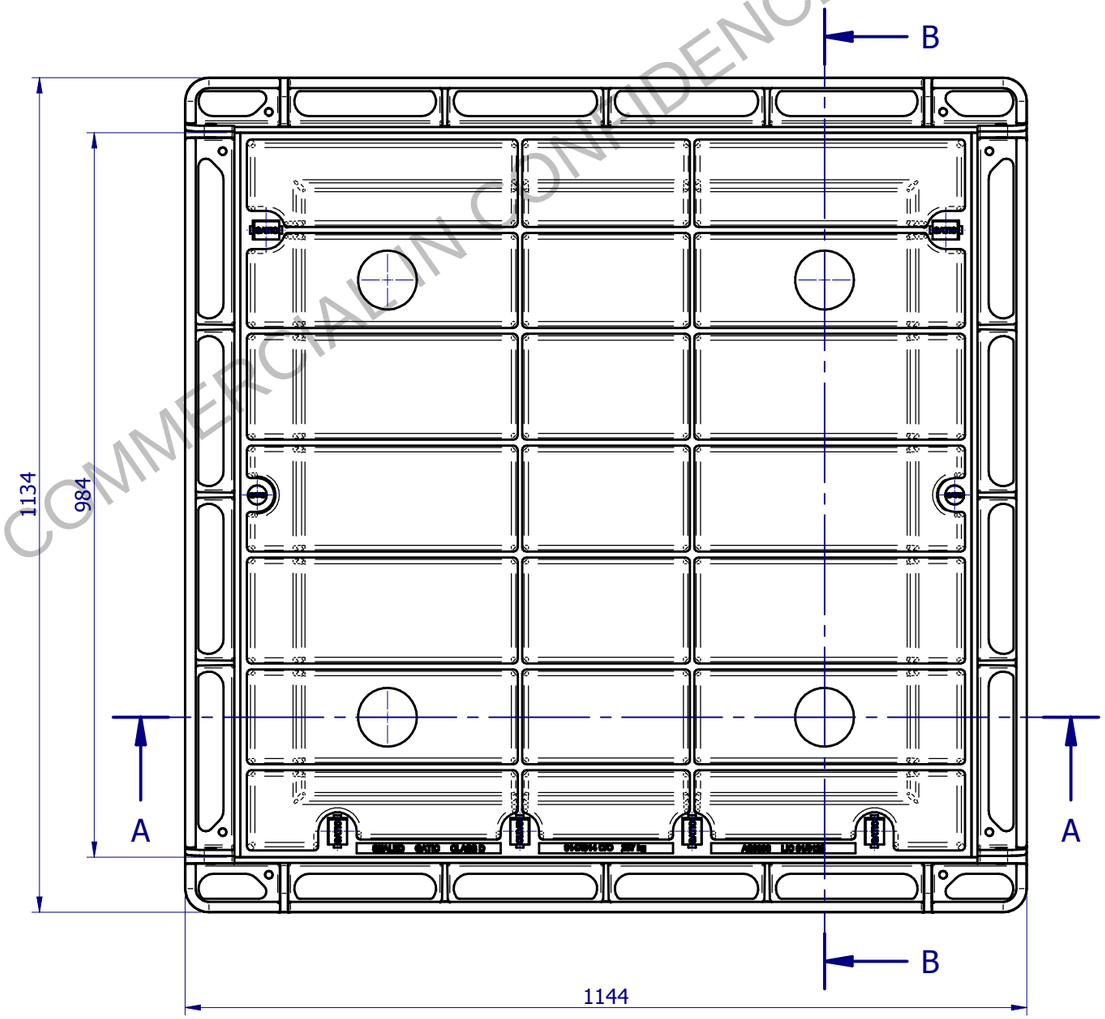

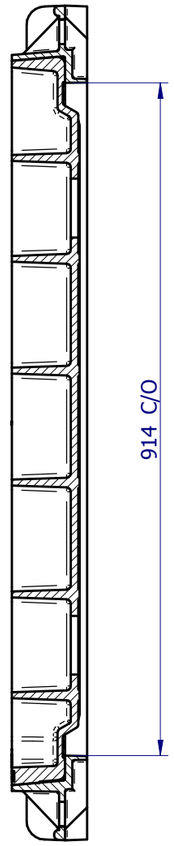

SECTION B-B

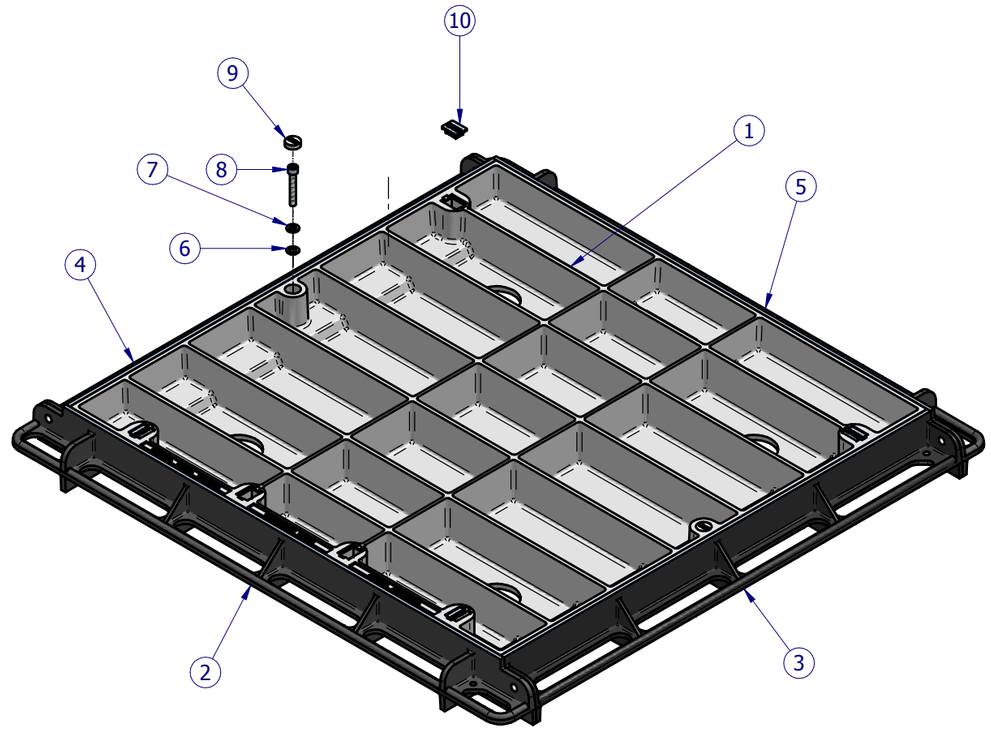

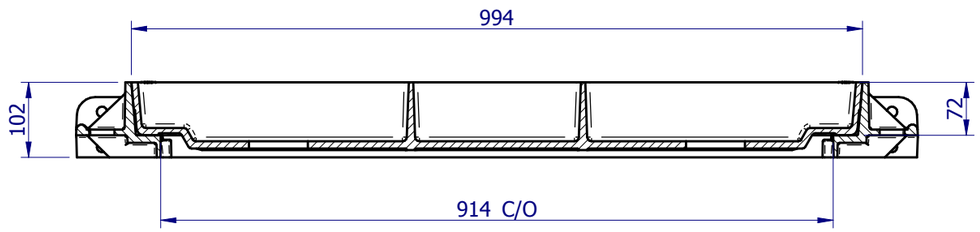

SECTION A-A

Item No.	Document No.	Revision	Title	Material	Qty	Mass
1	1662	G	914x914 C/O Concrete Infill Cover Class D	Ductile Iron 500-7	1	137.5 kg
2	4013	B	914mm Draw Cut Bar Class D	Ductile Iron 500-7	1	15.4 kg
3	4015	C	914 mm RH Side Bar Class D	Ductile Iron 500-7	1	13.8 kg
4	4014	C	914 mm LH Side Bar Class D	Ductile Iron 500-7	1	13.9 kg
5	4016	B	914mm Under Cut Bar Class D	Ductile Iron 500-7	1	12.8 kg
6	2856	A	M10 Washer	Nylon, general purpose	2	0.0 kg
7	2855	A	M10 Washer	Stainless Steel, 304	2	0.0 kg
8	2857	A	M10x65 Socket Head Cap Bolt	Stainless Steel, 304	2	0.1 kg
9	2854	C	Plastic Plug Ø26 mm	UV Stabilized Nylon	2	0.0 kg
10	1681	A	Plastic Keyhole Plug	UV Stabilized Nylon	6	0.0 kg

REVISION No	DATE	DESCRIPTION	BY	CKD.
A	09-10-14	Initial Release	F.M.	S.S.

UNLESS OTHERWISE STATED
ALL MEASURES IN MILIMETERS.
GENERAL CAST TOLERANCES: CT9 to ISO 8062.
CASTING RADII: 3 mm
DRAFT TAPERS: 2°

LINEAR MACHINING TOLERANCE:
X. ±0.25 mm
X.X ±0.10 mm

ANGULAR MACHINING TOLERANCE:
X. ±0.5°
X.X ±0.1°

NOM = Nominal; O/A = Overall; TYP = Typical; C/O = Clear Opening

FINISH: ALL CAST SURFACES TO BE PAINTED AS SPECIFIED. FABRICATED COMPONENTS TO BE HOT DIP GALVANISED TO AS4680. LIGHT FILM OF GATIC SEALING GREASE TO BE APPLIED ON ALL MACHINED SURFACES.

GATIC
GATIC PTY LTD
9-15 Radford Road, PO Box 312, Reservoir VIC. 3073
Ph- 03 9316 2666 Fax- 03 9315 0099 www.gatic.com.au

THIRD ANGLE PROJECTION

	BY	DATE
DESIGNED:	F.M.	09-10-14
DRAWN:	F.M.	09-10-14
CHECKED:	S.S.	09-10-14
APPROVED:	H.B.	09-10-14

CODE: GM301C99D
SCALE: N.T.S.
FORMAT: A3
SHEET: 1 of 1

TITLE: 914x914 C/O CONCRETE INFILL COVER & FRAME ASSEMBLY CLASS D
MATERIAL: --
MASS: 193.5 kg
DRG. No: 5039
REV: A

© Copyright : Gatic Pty Ltd - 2014