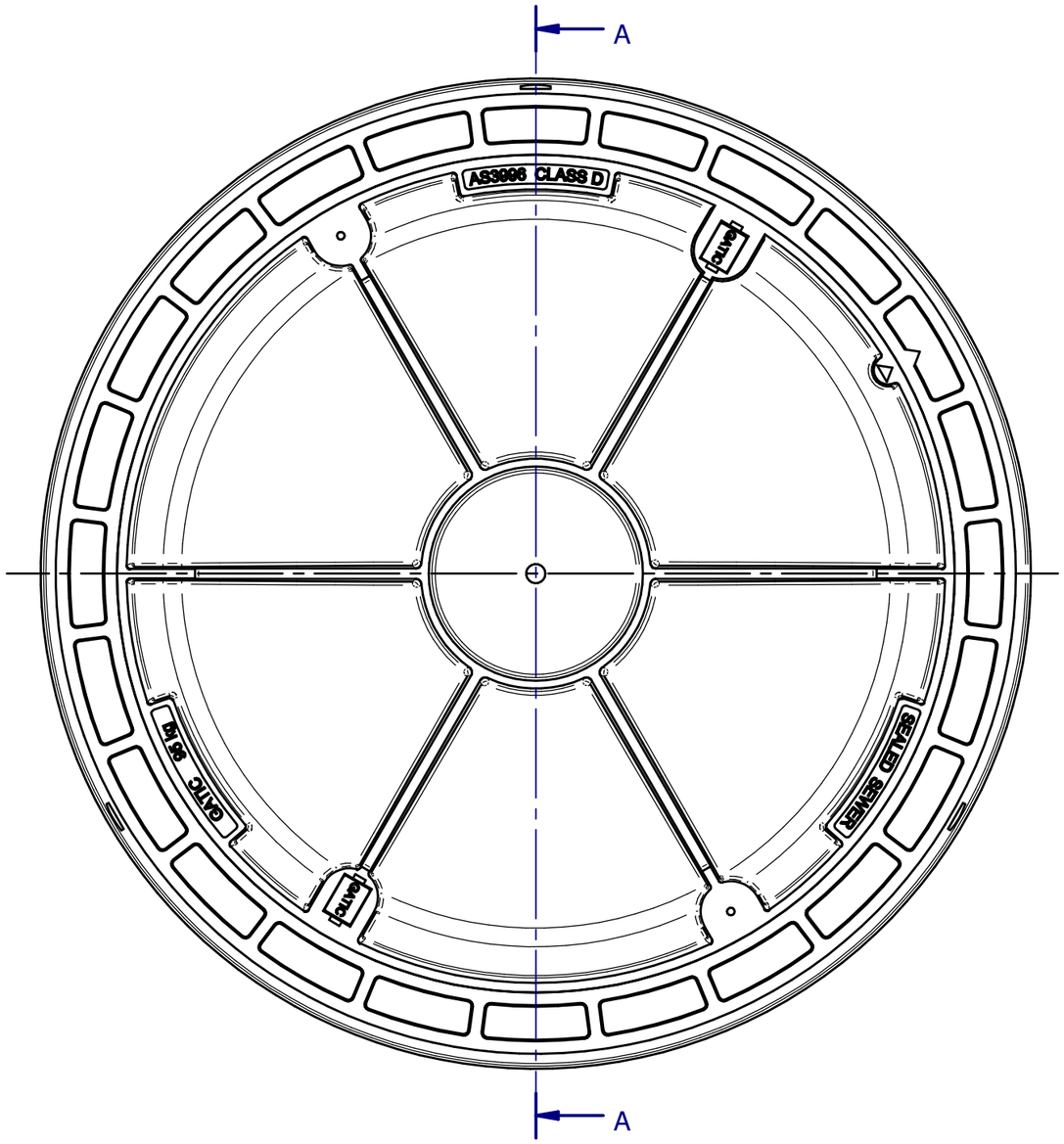

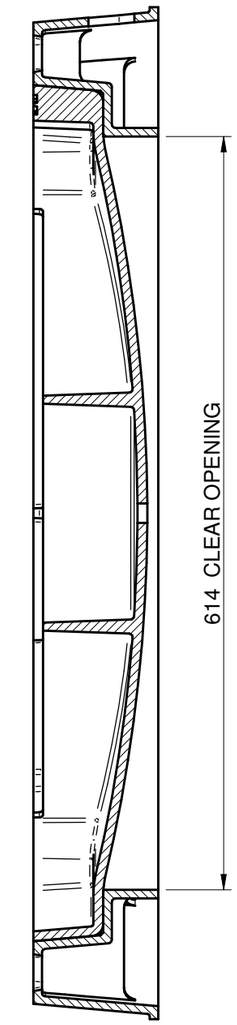

SECTION A-A

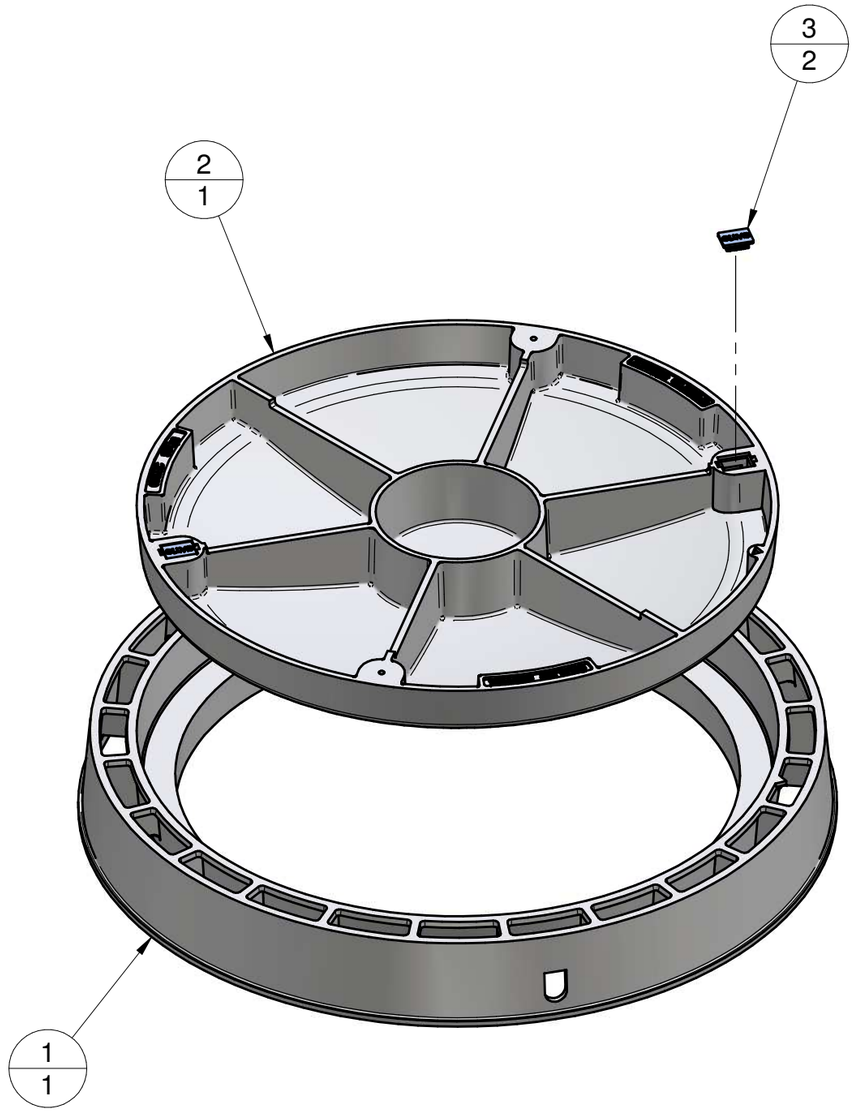

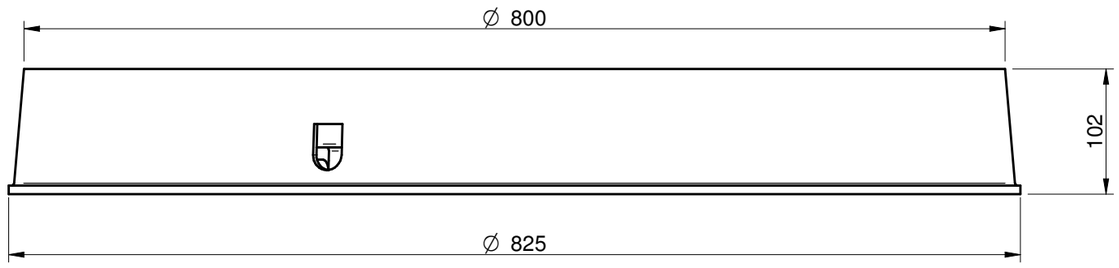

Item	DWG	Rev	Title	Material	Qty	Mass
1	2373	C	300C6D2 Frame	Ductile Iron 500 - 7	1	32.846 kg
2	2374	D	300C6D2 Cover	Ductile Iron 500 - 7	1	41.260 kg
3	1681	A	Plastic Keyhole Plug	UV Stabilized Nylon	2	0.010 kg

COMMERCIAL - IN CONFIDENCE

REVISION No	DATE	DESCRIPTION	BY	CKD.
D	27-10-09	BOLT DOWN BOSSES ADDED. COMPONENTS REVISED.	S.S.	M.B.
C	17-07-08	PARTS REVISED.	S.S.	H.B.
B	04-02-08	KEYHOLE DETAILS CHANGED.	F.M.	M.K.
A	03-12-07	INITIAL RELEASE.	F.M.	M.K.

UNLESS OTHERWISE STATED
ALL MEASURES IN MILIMETERS.
GENERAL CAST TOLERANCES:
CT9 to ISO 8062.
CASTING RADII: 3 mm
DRAFT TAPERS: 2°

LINEAR MACHINING TOLERANCE:
X. ±0.25 mm
X.X ±0.10 mm

ANGULAR MACHINING TOLERANCE:
X. ±0.5°
X.X ±0.1°

NOM = Nominal; O/A = Overall; TYP = Typical; C/O = Clear Opening

FINISH: ALL CAST SURFACES TO BE PAINTED AS SPECIFIED.
FABRICATED COMPONENTS TO BE HOT DIP GALVANISED TO AS/NZS 4680.
LIGHT FILM OF GATIC SEALING GREASE TO BE APPLIED ON ALL MACHINED SURFACES.

GATIC PTY LTD
9-15 Radford Road, PO Box 312, Reservoir VIC. 3073
Ph- 03 9316 2666 Fax- 03 9315 0099 www.gatic.com.au

THIRD ANGLE PROJECTION

	BY	DATE
DESIGNED:	-	-
DRAWN:	F.M.	03-12-07
CHECKED:	M.K.	03-12-07
APPROVED:	H.B.	03-12-07

CODE: GM300C6D2
SCALE: N.T.S.
FORMAT: A3
SHEET: 1 of 1

TITLE: 600 C/O COVER AND FRAME CLASS D CONCRETE INFILLED 57 mm DEEP COVER
MATERIAL:
MASS: 74.133 kg
DRG. No: 2375
REV: D

© Copyright : Gatic Pty Ltd - 2008