COMMERCIAL IN CONFIDENCE

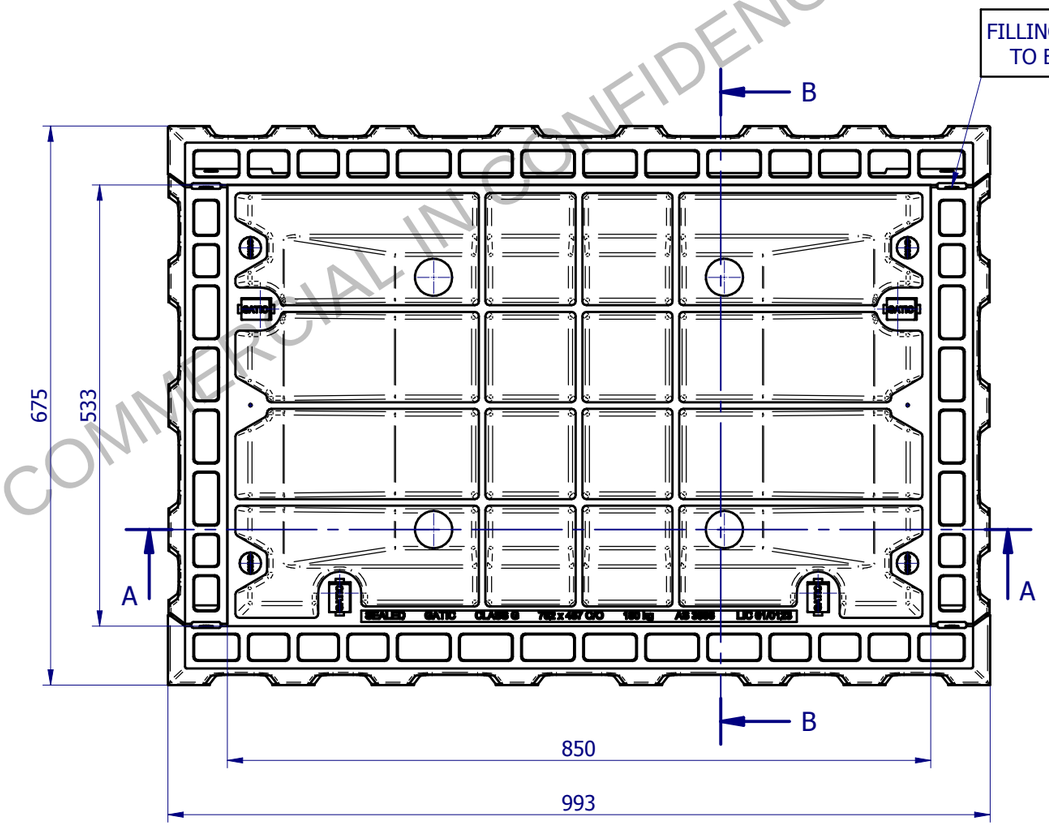

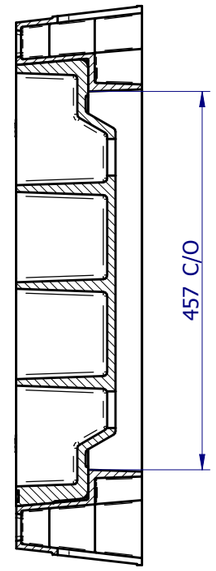

SECTION B-B

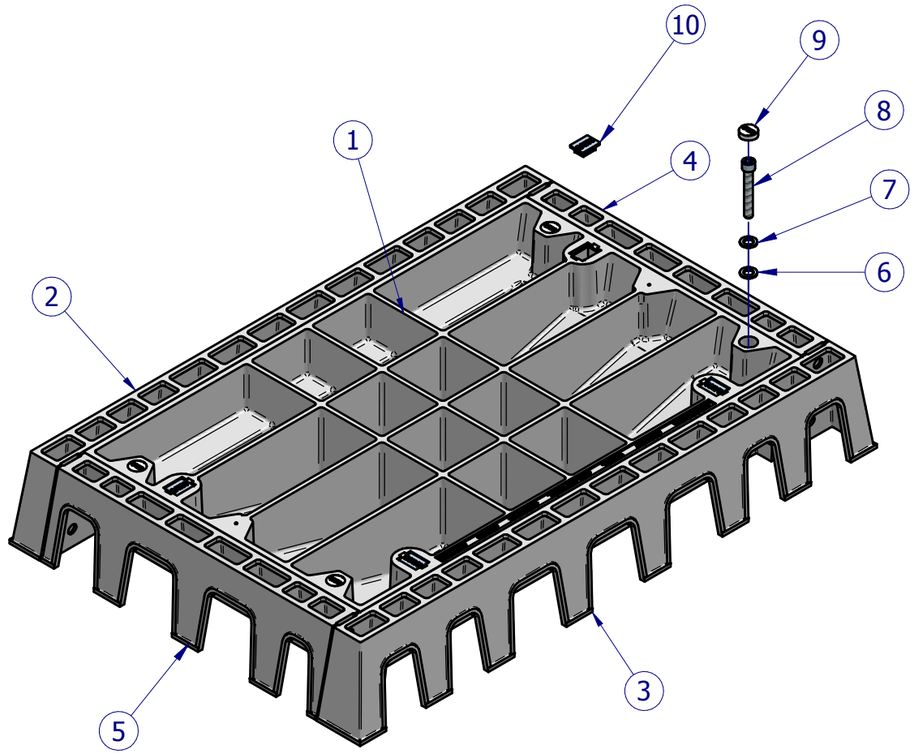

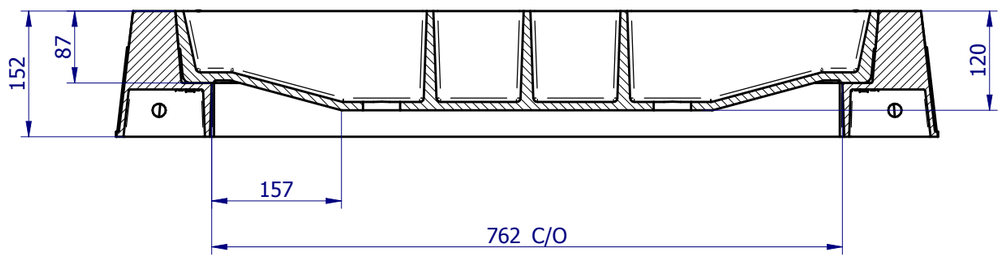

SECTION A-A

Item No.	Document No.	Rev.	Title	Material	Qty	Mass
1	2814	B	762X457 C/O Concrete Infill Cover Class G	Ductile Iron 500 - 7	1	96.2 kg
2	2820	B	762 mm Under Cut Bar Class G	Ductile Iron 500 - 7	1	15.7 kg
3	2824	B	762 mm Draw Cut Bar Class G	Ductile Iron 500 - 7	1	16.0 kg
4	2826	B	457 mm RH Side Bar Class G	Ductile Iron 500 - 7	1	9.6 kg
5	2830	B	457 mm LH Side Bar Class G	Ductile Iron 500 - 7	1	9.6 kg
6	2917	A	M12 Washer	Nylon, general purpose	4	0.0 kg
7	2918	A	M12 Washer	Stainless Steel, 304	4	0.0 kg
8	2919	A	M12x75 Socket Head Cap Bolt	Stainless Steel, 304	4	0.4 kg
9	2854	A	Plastic Plug Ø26 mm	UV Stabilized Nylon	4	0.0 kg
10	1681	A	Plastic Keyhole Plug	UV Stabilized Nylon	4	0.0 kg

REVISION

No	DATE	DESCRIPTION	BY	CKD.
C	07-05-13	FRAMES MODIFIED	F.M.	S.S.
B	02-10-09	MARKINGS LAYOUT UPDATED ON COVER	F.M.	S.S.
A	14-01-09	INITIAL RELEASE.	F.M.	S.S.

UNLESS OTHERWISE STATED
ALL MEASURES IN MILIMETERS.
GENERAL CAST TOLERANCES:
CT9 to ISO 8062.
CASTING RADII: 3 mm
DRAFT TAPERS: 2°

LINEAR MACHINING TOLERANCE:
X. ±0.25 mm
X.X ±0.10 mm

ANGULAR MACHINING TOLERANCE:
X. ±0.5°
X.X ±0.1°

NOM = Nominal; O/A = Overall; TYP = Typical; C/O = Clear Opening

FINISH: ALL CAST SURFACES TO BE PAINTED AS SPECIFIED. FABRICATED COMPONENTS TO BE HOT DIP GALVANISED TO AS4680. LIGHT FILM OF GATIC SEALING GREASE TO BE APPLIED ON ALL MACHINED SURFACES.

GATIC
GATIC PTY LTD
9-15 Radford Road, PO Box 312, Reservoir VIC. 3073
Ph- 03 9316 2666 Fax- 03 9315 0099 www.gatic.com.au

THIRD ANGLE PROJECTION

	BY	DATE
DESIGNED:	F.M.	27-06-08
DRAWN:	F.M.	14-01-09
CHECKED:	S.S.	14-01-09
APPROVED:	H.B.	14-01-09

CODE: GM301C74G
SCALE: N.T.S.
FORMAT: A3
SHEET: 1 of 1

TITLE: 762x457 C/O CONCRETE INFILL COVER & FRAME ASSY CLASS G
MATERIAL:
MASS: 147.5 kg
DRG. No: 2839
REV: C

© Copyright : Gatic Pty Ltd - 2013