NOTE:
8 only of M10x40 Hex head bolts required for assembly C/W washers and nuts.

COMMERCIAL IN CONFIDENCE

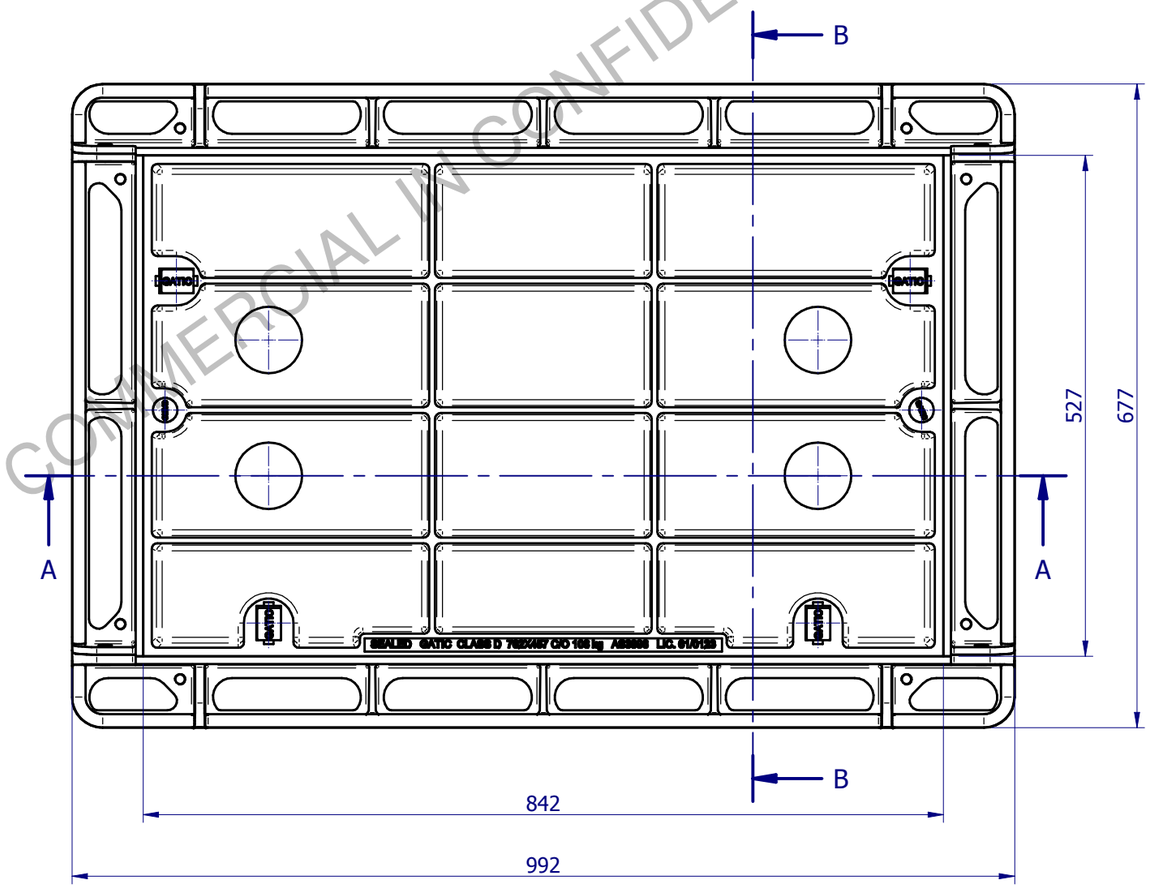

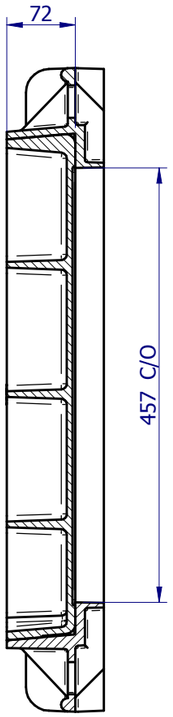

SECTION B-B

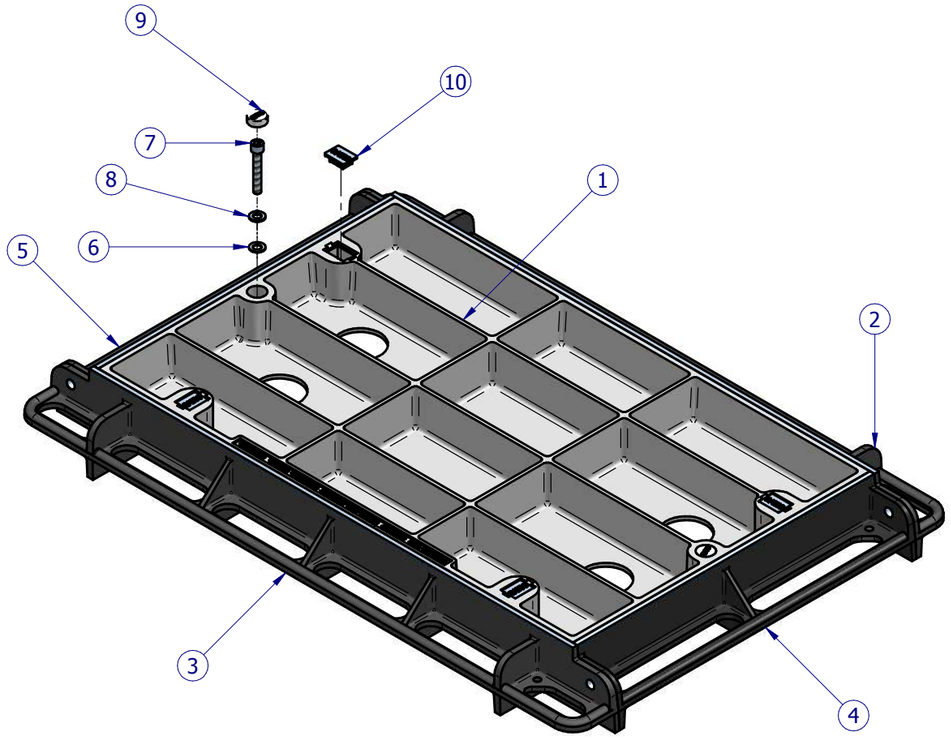

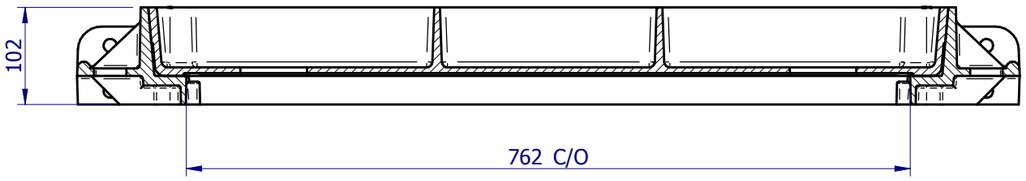

SECTION A-A

GM301C74D						
Item No.	Drwg #	Rev #	Title	Material	Qty.	Mass
1	1722	C	762x457 C/O Class D Conc Infill Cover	Ductile Iron 500-7	1	50.4 kg
2	4012	B	762mm Under Cut Bar Class D	Ductile Iron 500-7	1	11.2 kg
3	4008	B	762mm Draw Cut Bar Class D	Ductile Iron 500-7	1	13.5 kg
4	4002	C	527 mm RH Side Bar	Ductile Iron 500-7	1	7.7 kg
5	4001	C	527 mm LH Side Bar	Ductile Iron 500-7	1	7.7 kg
6	--	--	M10 Washer	Nylon, general purpose	2	0.0 kg
7	--	--	M10x65 Socket Head Cap Bolt	Stainless Steel, 304	2	0.1 kg
8	--	--	M10 Washer	Stainless Steel, 304	2	0.0 kg
9	2854	C	Plastic Plug Ø26 mm	UV Stabilized Nylon	2	0.0 kg
10	1681	A	Plastic Keyhole Plug	UV Stabilized Nylon	4	0.0 kg

REVISION

No	DATE	DESCRIPTION	BY	CKD.
A	13-05-2019	INITIAL RELEASE.	F.M.	S.S.

UNLESS OTHERWISE STATED
ALL MEASURES IN MILIMETERS.
GENERAL CAST TOLERANCES:
CT9 to ISO 8062.
CASTING RADII: 3 mm
DRAFT TAPERS: 2°

LINEAR MACHINING TOLERANCE:
X. ±0.25 mm
X.X ±0.10 mm

ANGULAR MACHINING TOLERANCE:
X. ±0.5°
X.X ±0.1°

NOM = Nominal; O/A = Overall; TYP = Typical; C/O = Clear Opening

FINISH: ALL CAST SURFACES TO BE PAINTED BLACK.
FABRICATED COMPONENTS TO BE HOT DIP GALVANISED TO AS4680.
RUST PROOF SEALANT TO BE APPLIED ON ALL MACHINED SURFACES.

GATIC PTY LTD
9-15 Radford Road, PO Box 312, Reservoir VIC. 3073
Ph- 03 9316 2666 Fax- 03 9315 0099 www.gatic.com.au

THIRD ANGLE PROJECTION

	BY	DATE
DESIGNED:	S.S.	13-05-2019
DRAWN:	F.M.	13-05-2019
CHECKED:	F.M.	13-05-2019
APPROVED:	S.S.	13-05-2019

CODE: GM301C74D
SCALE: N.T.S.
FORMAT: A3
SHEET: 1 of 1

TITLE: 762x457 C/O CONCRETE INFILL COVER & FRAME ASSEMBLY CLASS D
MATERIAL:
MASS: 90.6 kg
DRG. No: 5653
REV: A

© Copyright : Gatic Pty Ltd - 2019