NOTE:

8 only of M10x50 Hex head bolts required for assembly C/W washers and nuts.

COMMERCIAL IN CONFIDENCE

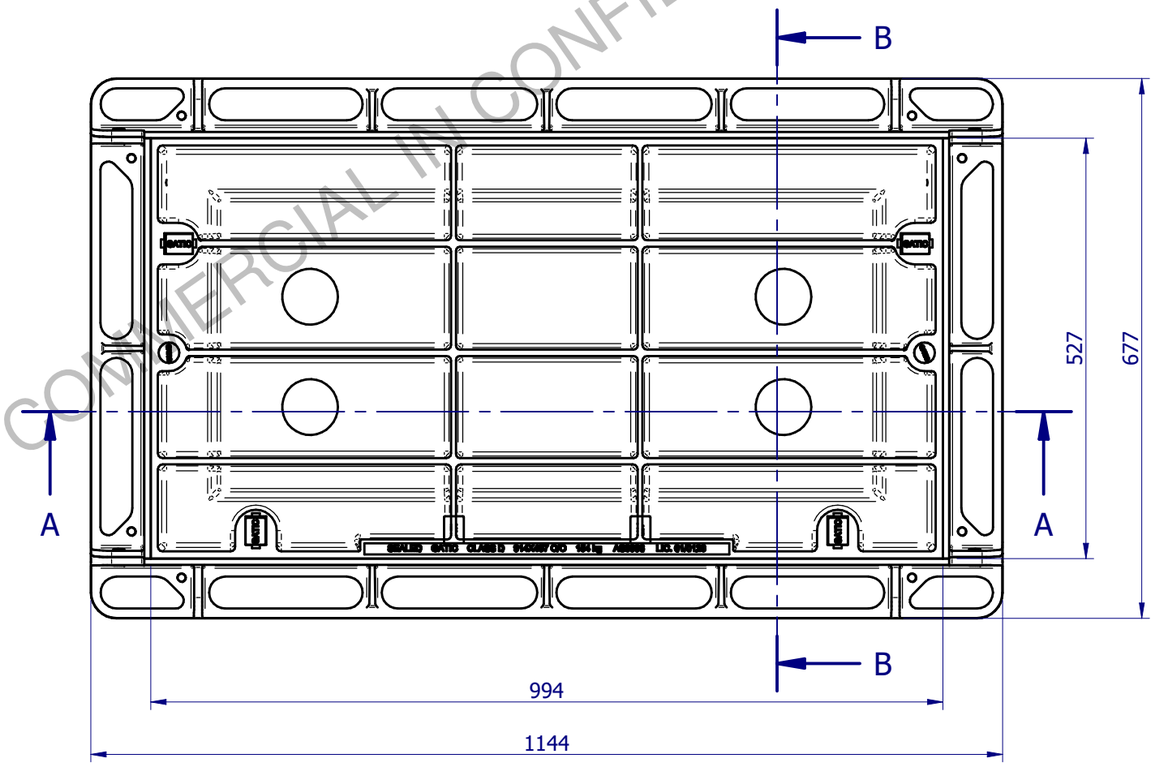

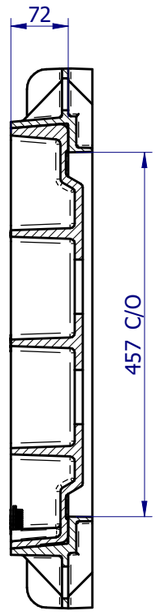

SECTION B-B

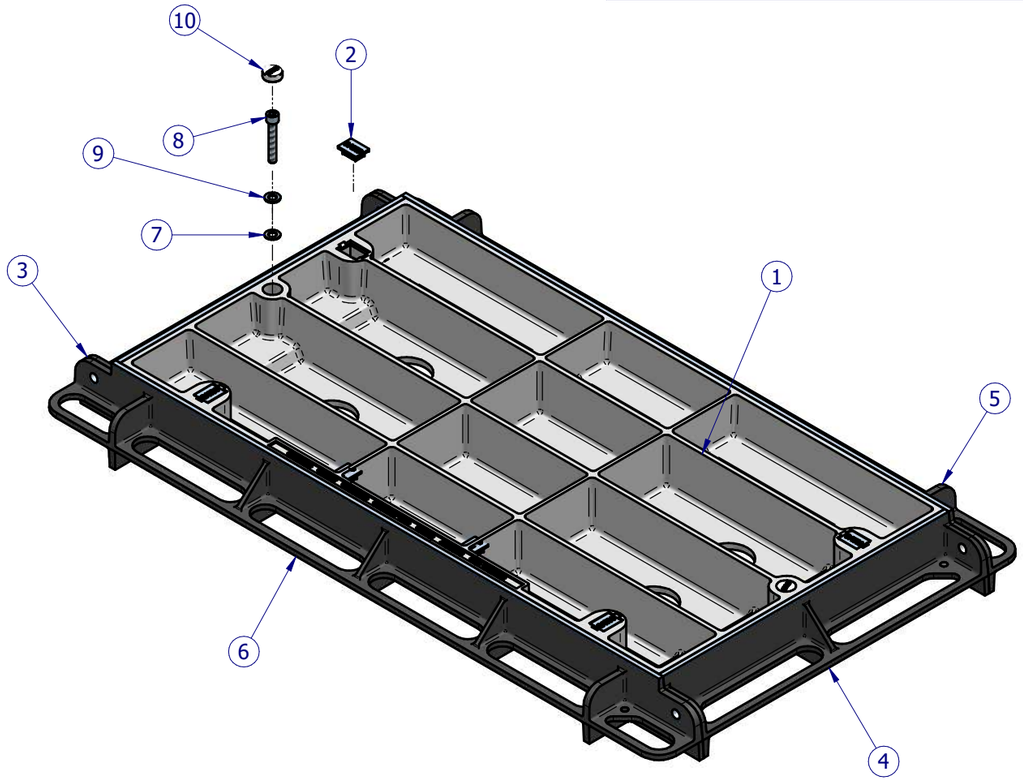

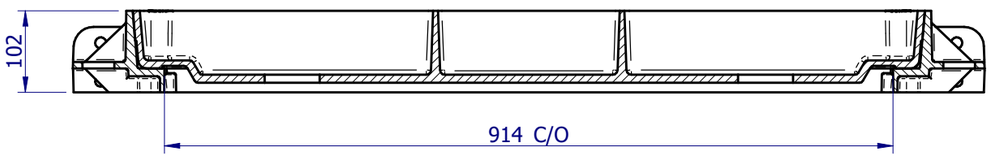

SECTION A-A

GM301C94D						
Item No.	Drwg.	Rev.	Title	Material	Qty	Mass
1	1726	D	914x457 C/O rec Conc Infill Cover Class D	Ductile Iron 500 - 7	1	77.2 kg
2	1681	A	Plastic Keyhole Plug	UV Stabilized Nylon	6	0.0 kg
3	4001	C	457mm LH Side Bar Class D	Ductile Iron 500-7	1	7.3 kg
4	4002	C	457mm RH Side Bar Class D	Ductile Iron 500-7	1	7.3 kg
5	4016	B	914mm Under Cut Bar Class D	Ductile Iron 500-7	1	11.8 kg
6	4013	B	914mm Draw Cut Bar Class D	Ductile Iron 500-7	1	14.4 kg
7	2856	A	M10 Washer	Nylon, general purpose	2	0.0 kg
8	2857	A	M10x65 Socket Head Cap Bolt	Stainless Steel, 304	2	0.1 kg
9	2855	A	M10 Washer	Stainless Steel, 304	2	0.0 kg
10	2854	C	Plastic Plug Ø26 mm	UV Stabilized Nylon	2	0.0 kg

REVISION

No	DATE	DESCRIPTION	BY	CKD.
B	13-11-19	Table Updated	F.M.	S.S.
A	14-09-18	Initial Release	F.M.	S.S.

UNLESS OTHERWISE STATED
ALL MEASURES IN MILIMETERS.
GENERAL CAST TOLERANCES:
CT9 to ISO 8062.
CASTING RADII: 3 mm
DRAFT TAPERS: 2°

LINEAR MACHINING TOLERANCE:
X. ±0.25 mm
X.X ±0.10 mm

ANGULAR MACHINING TOLERANCE:
X. ±0.5°
X.X ±0.1°

NOM = Nominal; O/A = Overall; TYP = Typical; C/O = Clear Opening

FINISH: ALL CAST SURFACES TO BE PAINTED AS SPECIFIED. FABRICATED COMPONENTS TO BE HOT DIP GALVANISED TO AS4680. LIGHT FILM OF GATIC SEALING GREASE TO BE APPLIED ON ALL MACHINED SURFACES.

GATIC PTY LTD
9-15 Radford Road, PO Box 312, Reservoir VIC. 3073
Ph- 03 9316 2666 Fax- 03 9315 0099 www.gatic.com.au

THIRD ANGLE PROJECTION

	BY	DATE
DESIGNED:	--	--
DRAWN:	F.M.	06-02-15
CHECKED:	S.S.	06-02-15
APPROVED:	H.B.	06-02-15

CODE: GM301C94D
SCALE: N.T.S.
FORMAT: A3
SHEET: 1 of 1

TITLE: 914x457 C/O CONCRETE INFILL COVER & FRAME CLASS D - ASSEMBLY
MATERIAL: --
MASS: 118.0 kg
DRG. No: 5521
REV: B

© Copyright : Gatic Pty Ltd - 2018