COMMERCIAL - IN CONFIDENCE

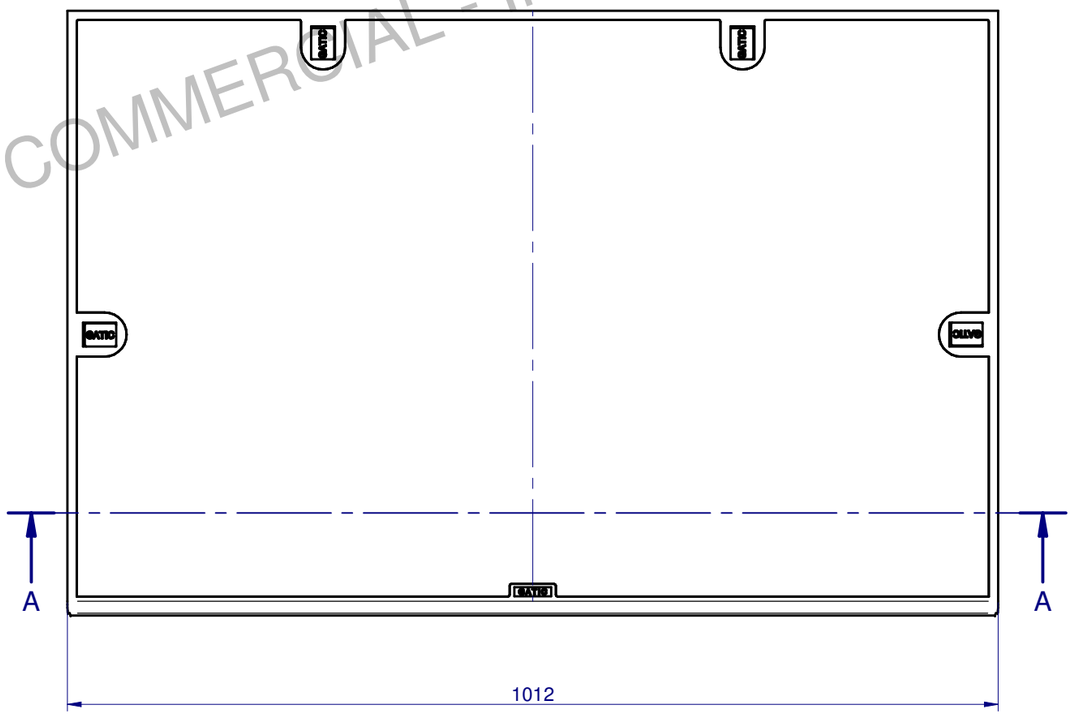

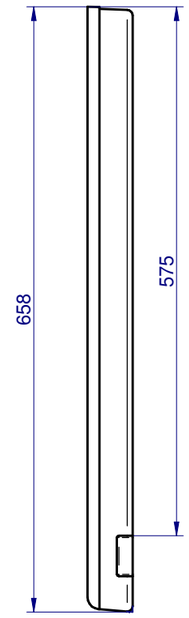

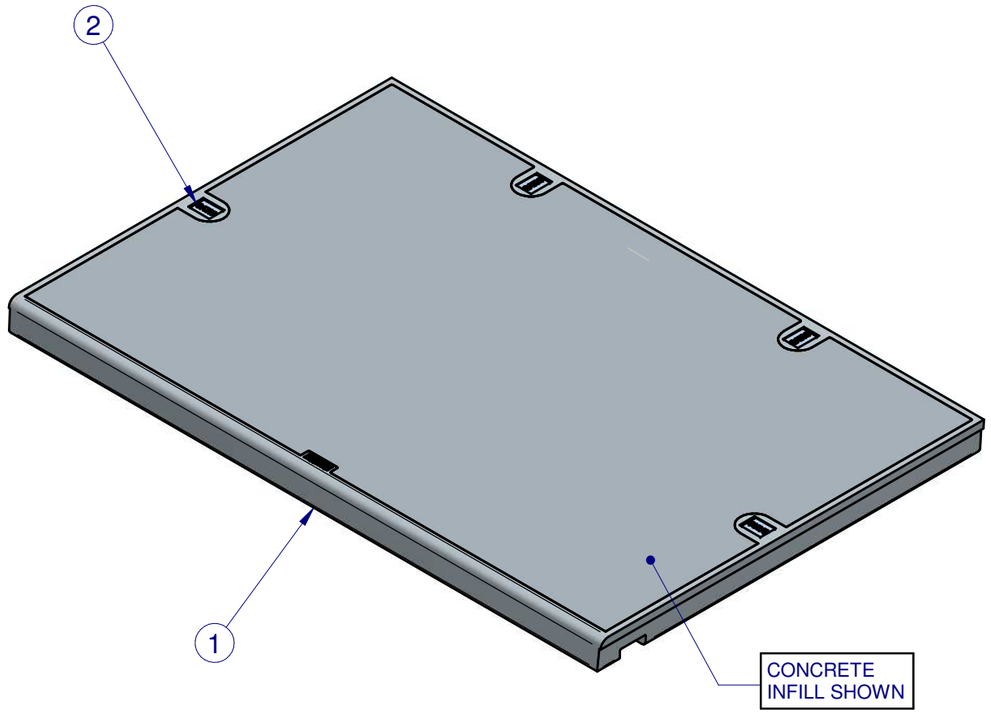

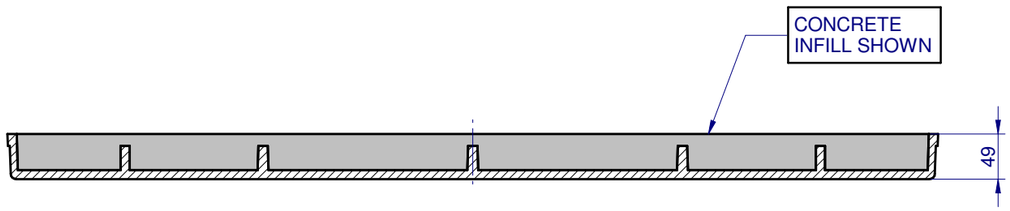

SECTION A-A

GM311C96BCF						
Item #	Drwg #	Rev #	Title	Material	Qty	Mass (kg)
1	5380	A	GM311C96BC - Cover	Ductile Iron 500-7	1	49.7 kg
2	1681	A	Plastic Keyhole Plug	UV Stabilized Nylon	4	0.0 kg

REVISION				
No	DATE	DESCRIPTION	BY	CKD.
A	31-08-20	INITIAL RELEASE.	F.M.	S.S.

UNLESS OTHERWISE STATED
ALL MEASURES IN MILIMETERS.
GENERAL CAST TOLERANCES:
CT9 to ISO 8062.
CASTING RADII: 3 mm
DRAFT TAPERS: 2°

LINEAR MACHINING TOLERANCE:
X. ±0.25 mm
X.X ±0.10 mm

ANGULAR MACHINING TOLERANCE:
X. ±0.5°
X.X ±0.1°

NOM = Nominal; O/A = Overall; TYP = Typical; C/O = Clear Opening

FINISH: ALL CAST SURFACES TO BE PAINTED AS SPECIFIED.
FABRICATED COMPONENTS TO BE HOT DIP GALVANISED TO AS/NZS 4680.
LIGHT FILM OF GATIC SEALING GREASE TO BE APPLIED ON ALL MACHINED SURFACES.

GATIC PTY LTD
9-15 Radford Road, PO Box 312, Reservoir VIC. 3073
Ph- 03 9316 2666 Fax- 03 9315 0099 www.gatic.com.au

THIRD ANGLE PROJECTION

	BY	DATE
DESIGNED:	X.X.	XX-XX-XX
DRAWN:	S.S.	XX-XX-XX
CHECKED:	S.S.	XX-XX-XX
APPROVED:	H.B.	XX-XX-XX

CODE: GM311C96BCF
SCALE: N.T.S.
FORMAT: A3
SHEET: 1 of 1

TITLE: 910 X 610 C/O CONCRETE INFILLED COVER CLASS B
MATERIAL:
MASS: 102.5 kg
DRG. No: 6034
REV: A

© Copyright : Gatic Pty Ltd - 2020