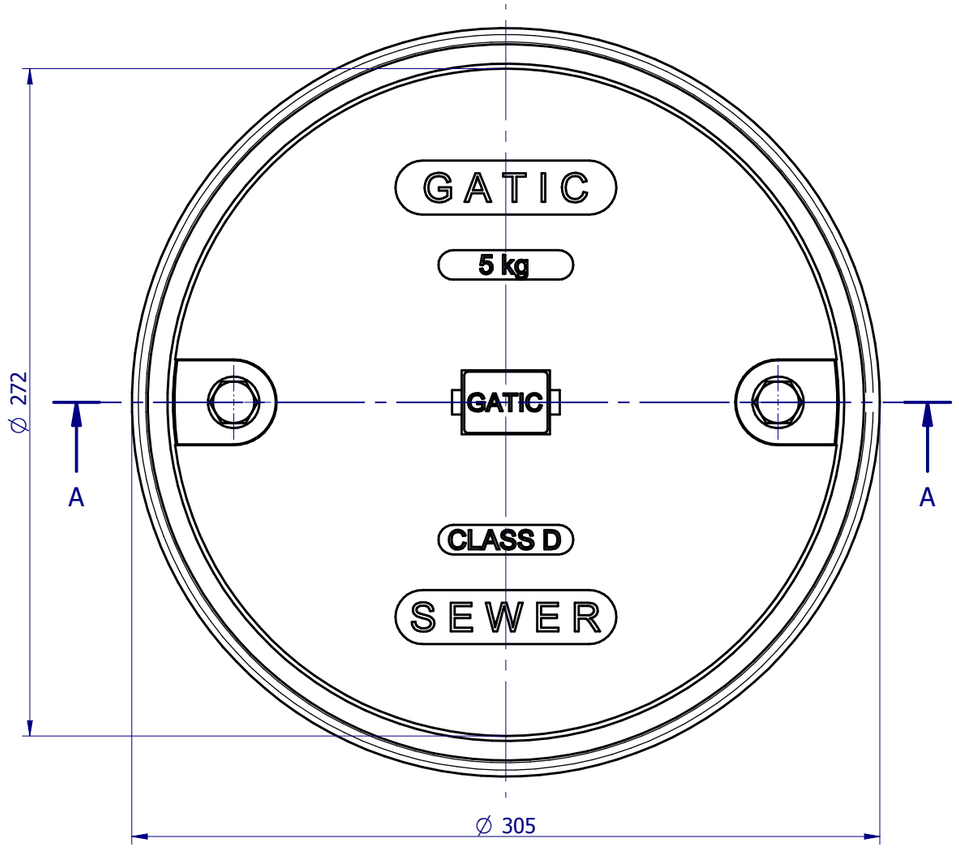

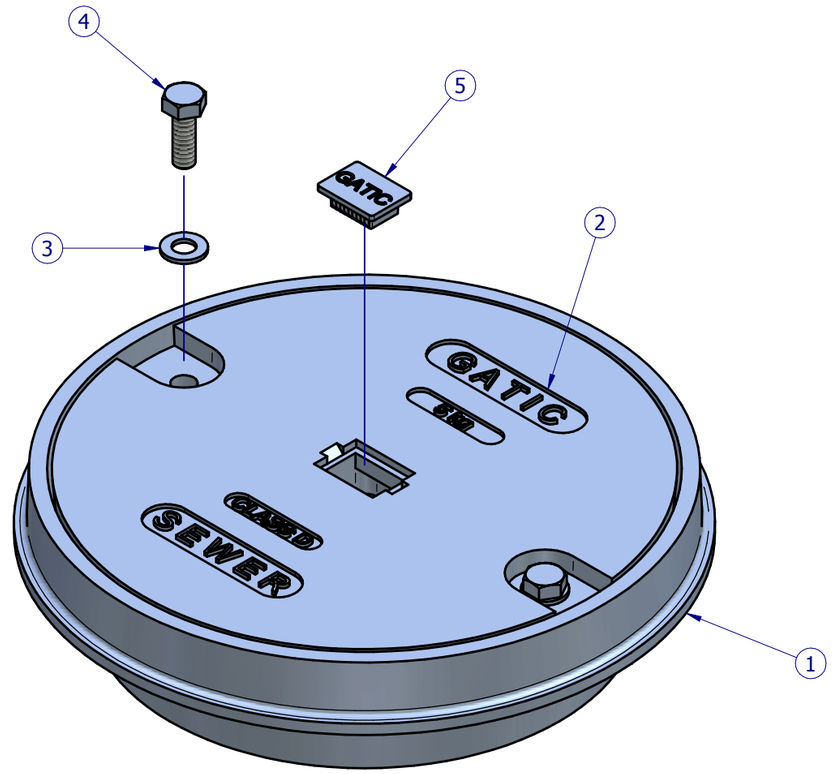

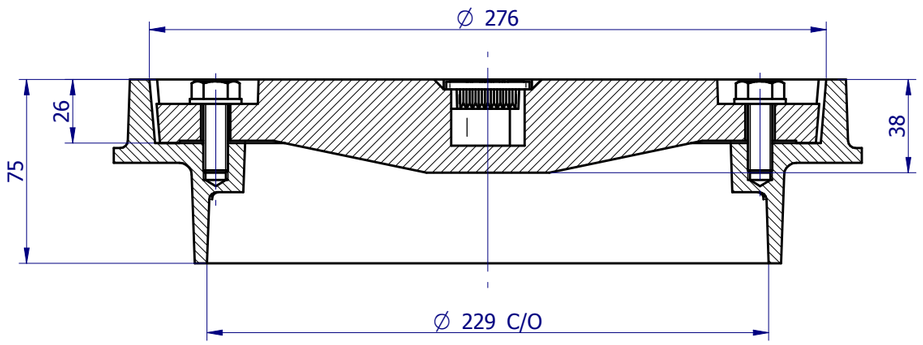

SECTION A-A

Item No.	Drwg No.	Rev	Title	Material	Qty	Mass
1	2964	A	Ø229 C/O Frame Class D	Ductile Iron 500 - 7	1	4.9
2	2963	A	Ø229 C/O S/T Cover Class D	Ductile Iron 500 - 7	1	4.8
3	2369	A	M10 Washer	Steel	2	0.0
4	3275	A	M10x30 Hex Head Bolt	Galvanized steel	2	0.1
5	1681	A	Plastic Keyhole Plug	UV Stabilized Nylon	1	0.0

REVISION

No	DATE	DESCRIPTION	BY	CKD.
B	14-09-17	REVISED WITH NO CHANGES.	F.M.	S.S.
A	13-05-11	INITIAL RELEASE.	F.M.	S.S.

UNLESS OTHERWISE STATED
ALL MEASURES IN MILIMETERS.
GENERAL CAST TOLERANCES:
CT9 to ISO 8062.
CASTING RADII: 3 mm
DRAFT TAPERS: 2°

LINEAR MACHINING TOLERANCE:
X. ±0.25 mm
X.X ±0.10 mm

ANGULAR MACHINING TOLERANCE:
X. ±0.5°
X.X ±0.1°

NOM = Nominal; O/A = Overall; TYP = Typical; C/O = Clear Opening

FINISH: ALL CAST SURFACES TO BE PAINTED BLACK.
FABRICATED COMPONENTS TO BE HOT DIP GALVANISED TO AS4680.
RUST PROOF SEALANT TO BE APPLIED ON ALL MACHINED SURFACES.

GATIC PTY LTD
9-15 Radford Road, PO Box 312, Reservoir VIC. 3073
Ph- 03 9316 2666 Fax- 03 9315 0099 www.gatic.com.au

THIRD ANGLE PROJECTION

	BY	DATE
DESIGNED:	F.M.	13-05-11
DRAWN:	F.M.	13-05-11
CHECKED:	S.S.	13-05-11
APPROVED:	H.B.	13-05-11

CODE: GM721
SCALE: N.T.S.
FORMAT: A3
SHEET: 1 of 1

TITLE: GM721 - Ø229 C/O SOLID TOP COVER AND FRAME ASSEMBLY CLASS D
MATERIAL:
MASS: 9.8 kg
DRG. No: 2965
REV: B

© Copyright : Gatic Pty Ltd - 2008