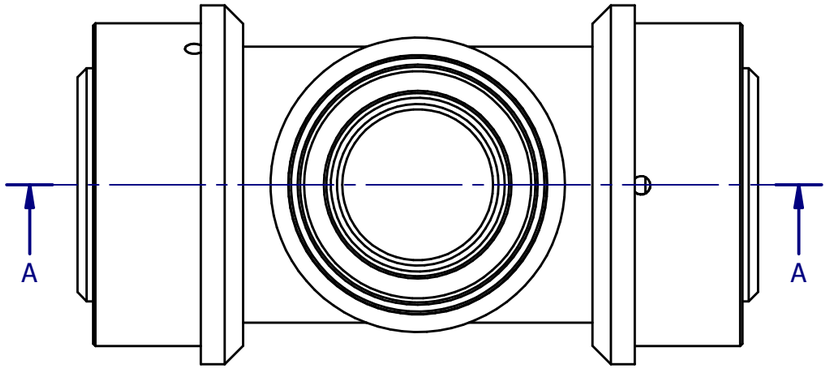

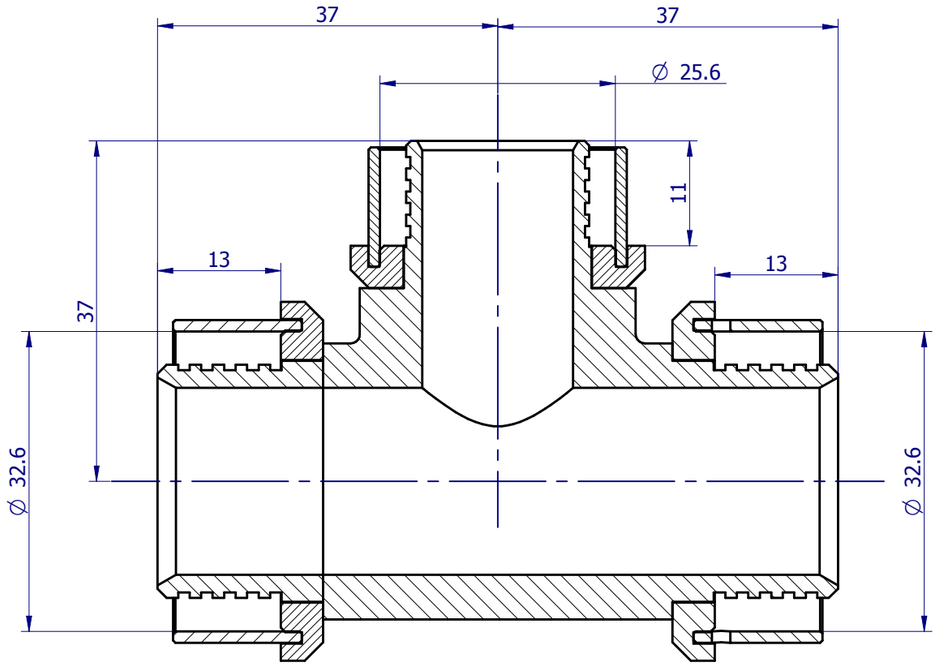

SECTION A-A

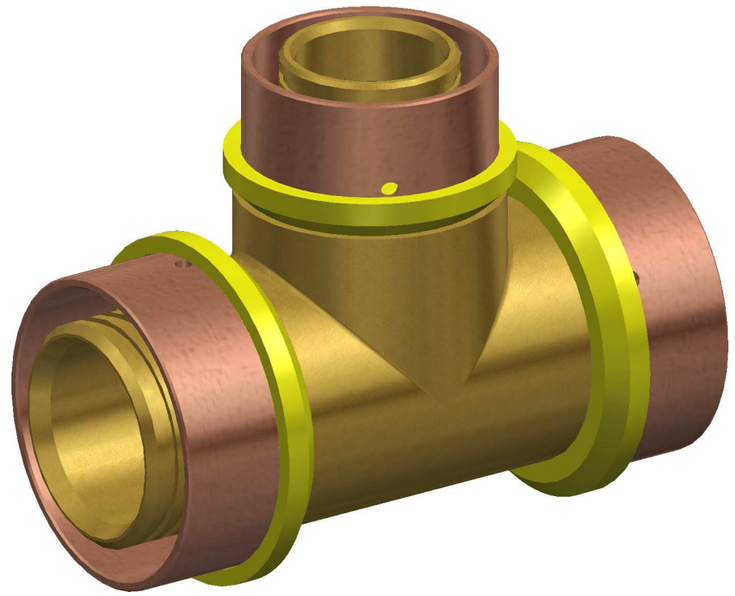

REVISIONS				
A	INITIAL RELEASE.	XX-XX-18	M.H.
REV	DESCRIPTION	DATE	APPROVED

UNLESS OTHERWISE STATED
NOM = Nominal
O/A = Overall
TYP = Typical
C/O = Clear Opening

All measures in millimeters.

1300 0 IPLEX (47539)
www.iplex.com.au
info@iplexpipelines.com.au

iPLEX Pipelines

THIRD ANGLE PROJECTION

MASS: .267 kg
MATERIAL: BRASS
A3 - NTS
Sheet 1 of 1

DESCRIPTION: DN32 x DN25 x DN32 K1™ Gas Brass Reducing Tee

CODE: FK156322532

REV: A