NOTE:

FRAME COMPONENTS ASSEMBLED USING M10x40 HEX BOLTS.

COMMERCIAL IN CONFIDENCE

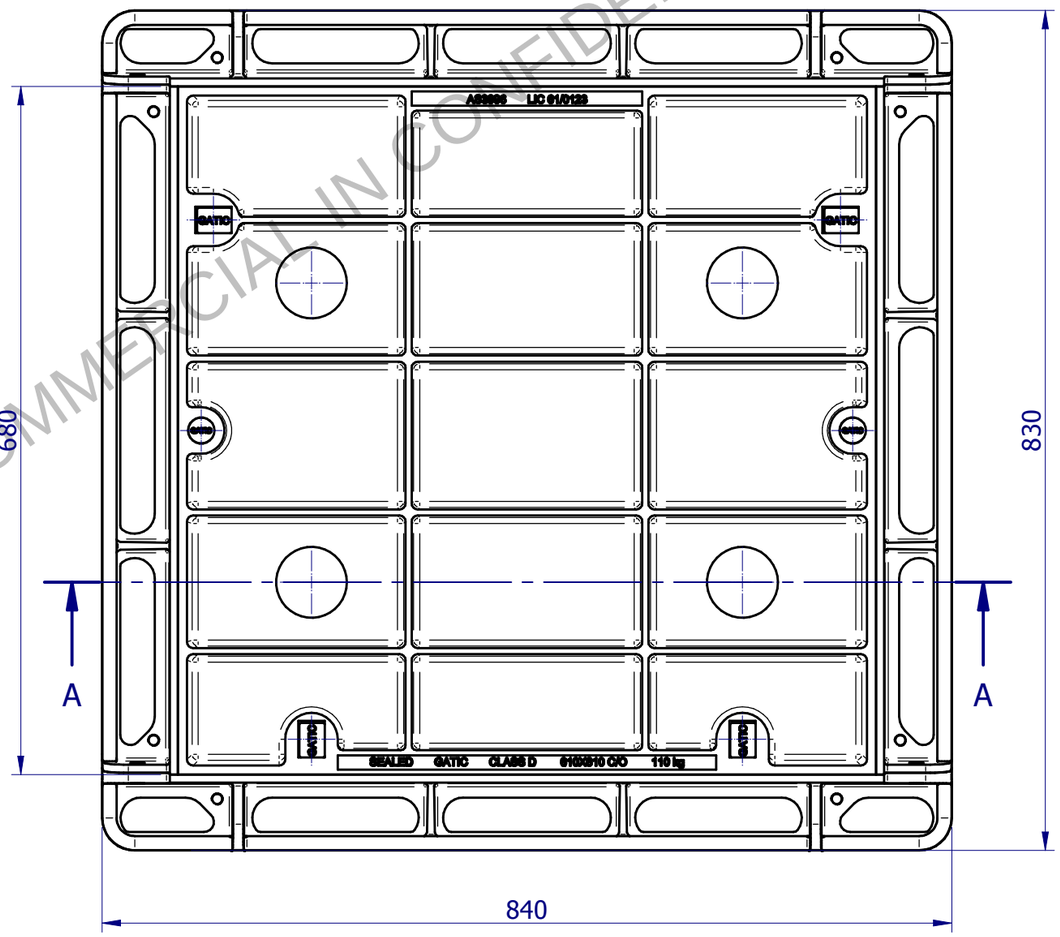

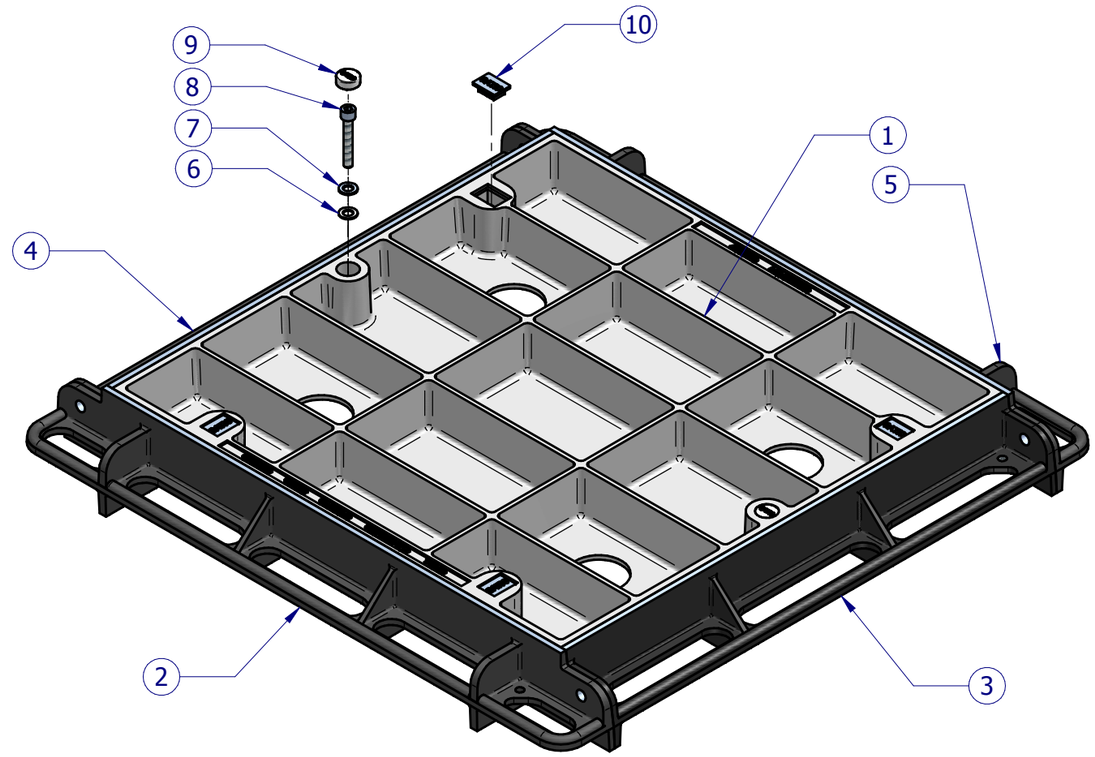

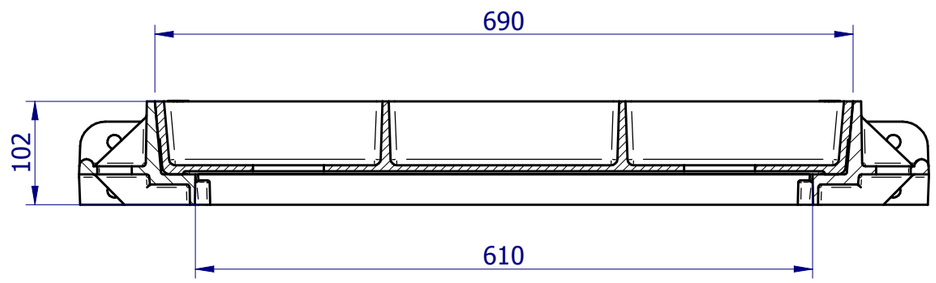

SECTION A-A

Item No.	Document No.	Revision	Title	Material	Qty	Mass
1	1658	E	610x610 C/O Concrete Infill Cover Class D	Ductile Iron 500-7	1	54.458
2	4004	B	610mm Draw Cut Bar Class D	Ductile Iron 500-7	1	11.322
3	4006	C	680 mm RH Side Bar	Ductile Iron 500-7	1	9.793
4	4005	C	527 mm LH Side Bar	Ductile Iron 500-7	1	9.793
5	4007	B	610mm Under Cut Bar Class D	Ductile Iron 500-7	1	9.447
6	2856	A	M10 Washer	Nylon, general purpose	2	0.001
7	2855	A	M10 Washer	Stainless Steel, 304	2	0.008
8	2857	A	M10x65 Socket Head Cap Bolt	Stainless Steel, 304	2	0.112
9	2854	C	Plastic Plug Ø26 mm	UV Stabilized Nylon	2	0.005
10	1681	A	Plastic Keyhole Plug	UV Stabilized Nylon	4	0.020

REVISION

No	DATE	DESCRIPTION	BY	CKD.
A	21-05-13	Initial Release	S.S.	S.S.

UNLESS OTHERWISE STATED
ALL MEASURES IN MILIMETERS.
GENERAL CAST TOLERANCES: CT9 to ISO 8062.
CASTING RADII: 3 mm
DRAFT TAPERS: 2°

LINEAR MACHINING TOLERANCE:
X. ±0.25 mm
X.X ±0.10 mm

ANGULAR MACHINING TOLERANCE:
X. ±0.5°
X.X ±0.1°

NOM = Nominal; O/A = Overall; TYP = Typical; C/O = Clear Opening

FINISH: ALL CAST SURFACES TO BE PAINTED AS SPECIFIED. FABRICATED COMPONENTS TO BE HOT DIP GALVANISED TO AS4680. LIGHT FILM OF GATIC SEALING GREASE TO BE APPLIED ON ALL MACHINED SURFACES.

GATIC PTY LTD
9-15 Radford Road, PO Box 312, Reservoir VIC. 3073
Ph- 03 9316 2666 Fax- 03 9315 0099 www.gatic.com.au

THIRD ANGLE PROJECTION

	BY	DATE
DESIGNED:	S.S.	21-05-13
DRAWN:	F.M.	21-05-13
CHECKED:	S.S.	21-05-13
APPROVED:	H.B.	21-05-13

CODE: GM301C66D
SCALE: N.T.S.
FORMAT: A3
SHEET: 1 of 1

TITLE: 610 x 610 C/O CONCRETE INFILL COVER & FRAME ASSEMBLY CLASS D
MATERIAL:
MASS: 94.958 kg
DRG. No: 4842
REV: A

© Copyright : Gatic Pty Ltd - 2013