COMMERCIAL IN CONFIDENCE

NOTE:
FRAME COMPONENTS ASSEMBLED USING M10x40 HEX BOLTS COMES WITH WASHERS AND NUTS

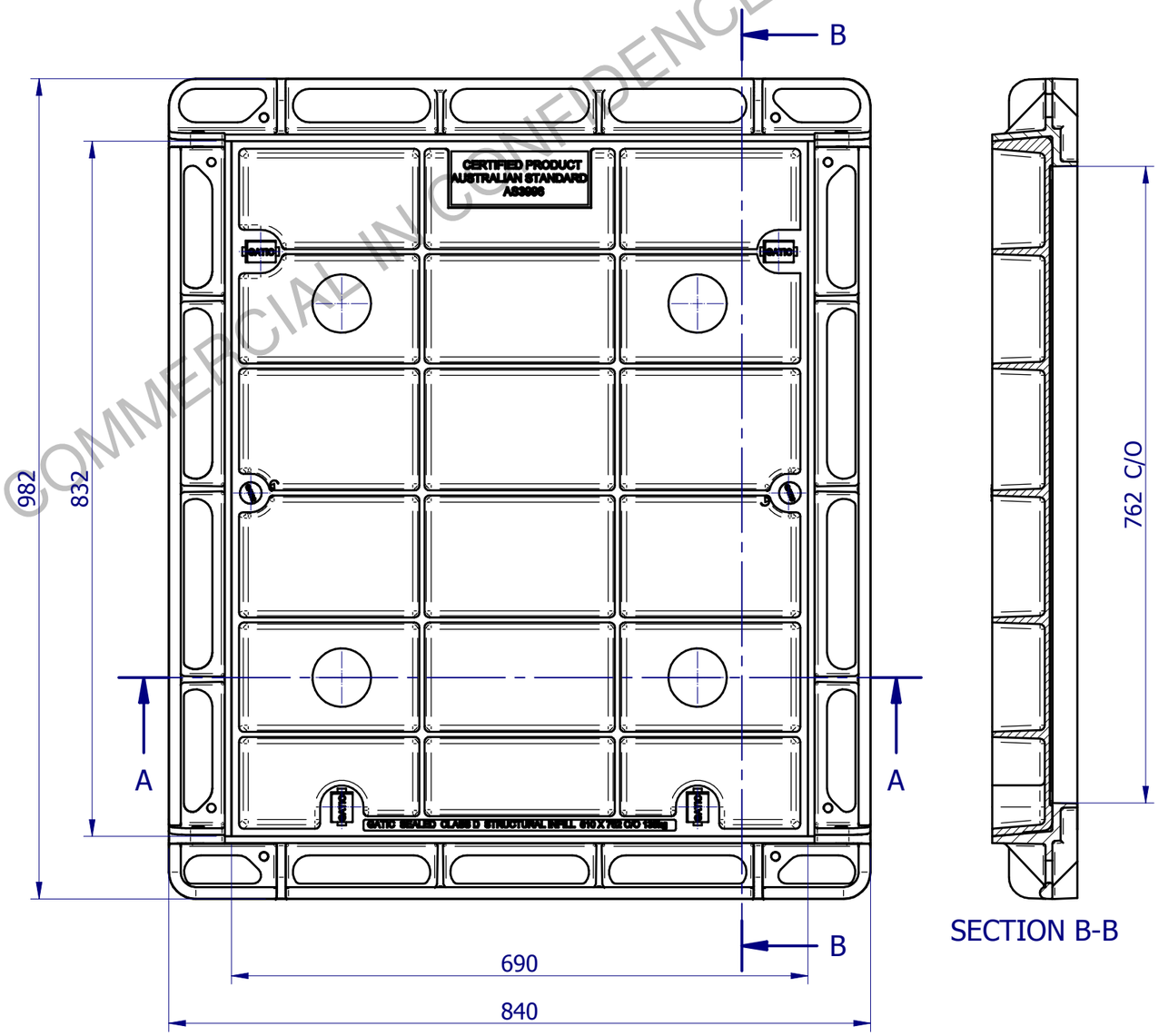

SECTION B-B

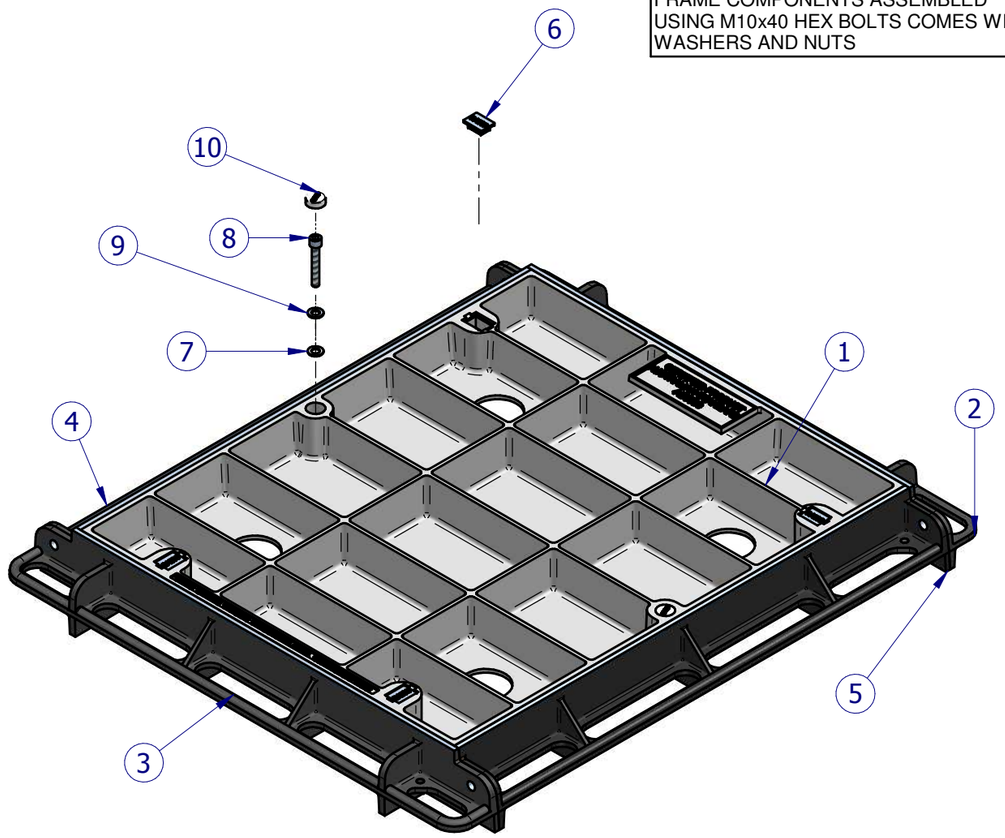

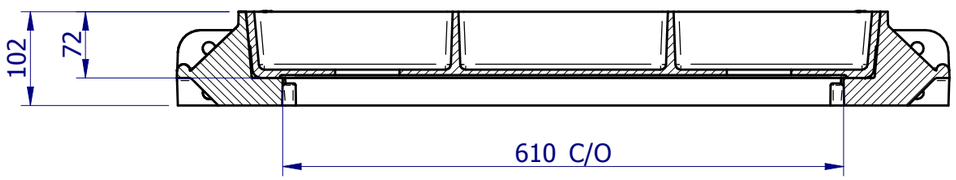

SECTION A-A

GM301C67D						
Item No.	Document No.	Revision	Title	Material	Qty.	Mass
1	1720	D	610x762 C/O Cover Class D	Ductile Iron 500 - 7	1	63.1 kg
2	4007	B	610mm Under Cut Bar Class D	Ductile Iron 500-7	1	8.7 kg
3	4004	B	610mm Draw Cut Bar Class D	Ductile Iron 500-7	1	10.6 kg
4	4009	C	762mm LH Side Bar Class D	Ductile Iron 500-7	1	11.3 kg
5	4011	C	762mm RH Side Bar Class D	Ductile Iron 500 - 7	1	11.3 kg
6	1681	A	Plastic Keyhole Plug	UV Stabilized Nylon	4	0.0 kg
7	2856	A	M10 Washer	Nylon, general purpose	2	0.0 kg
8	2857	A	M10x65 Socket Head Cap Bolt	Stainless Steel, 304	2	0.1 kg
9	2855	A	M10 Washer	Stainless Steel, 304	2	0.0 kg
10	2854	C	Plastic Plug Ø26 mm	UV Stabilized Nylon	2	0.0 kg

REVISION				
No	DATE	DESCRIPTION	BY	CKD.
A	14-09-18	Initial Release	F.M.	S.S.

UNLESS OTHERWISE STATED
ALL MEASURES IN MILIMETERS.
GENERAL CAST TOLERANCES: CT9 to ISO 8062.
CASTING RADII: 3 mm
DRAFT TAPERS: 2°

LINEAR MACHINING TOLERANCE:
X. ±0.25 mm
X.X ±0.10 mm

ANGULAR MACHINING TOLERANCE:
X. ±0.5°
X.X ±0.1°

NOM = Nominal; O/A = Overall; TYP = Typical; C/O = Clear Opening

FINISH: ALL CAST SURFACES TO BE PAINTED BLACK.
FABRICATED COMPONENTS TO BE HOT DIP GALVANISED TO AS4680.
RUST PROOF SEALANT TO BE APPLIED ON ALL MACHINED SURFACES.

GATIC PTY LTD
9-15 Radford Road, PO Box 312, Reservoir VIC. 3073
Ph- 03 9316 2666 Fax- 03 9315 0099 www.gatic.com.au

THIRD ANGLE PROJECTION

	BY	DATE
DESIGNED:	F.M.	22-07-08
DRAWN:	H.L.	22-07-08
CHECKED:	S.S.	22-07-08
APPROVED:	H.B.	27-07-08

CODE: GM301C67D
SCALE: N.T.S.
FORMAT: A3
SHEET: 1 of 1

TITLE: 610 x 762 C/O CONCRETE INFILL COVER & FRAME ASSEMBLY CLASS D
MATERIAL:
MASS: 102.7 kg
DRG. No: 5519
REV: A

© Copyright : Gatic Pty Ltd - 2018