COMMERCIAL - IN CONFIDENCE

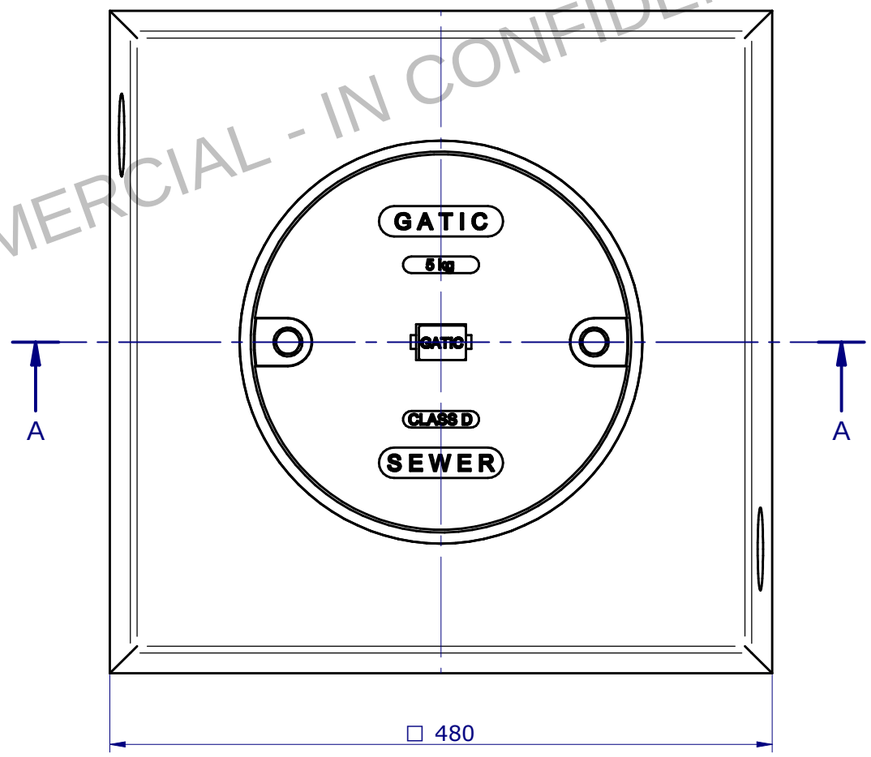

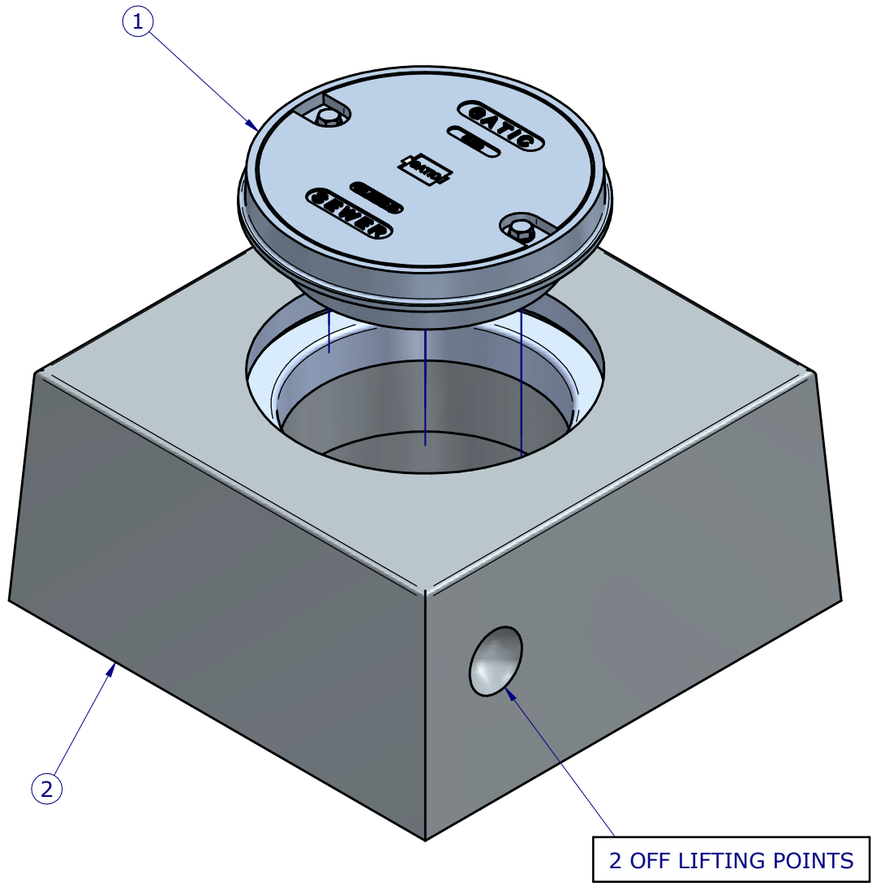

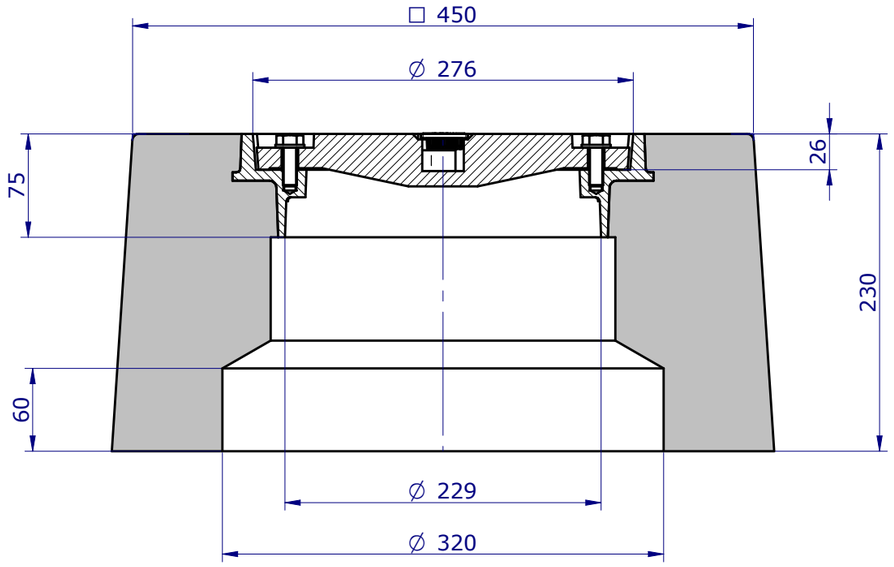

SECTION A-A

GMMM3					
ITEM #	DRWG #	REV #	DESCRIPTION #	QTY	MASS [kg]
1	2965	B	GM721 COVER & FRAME ASSEMBLY	1	10
2	5945	A	CONCRETE ENCASED BLOCK	1	89

REVISION				
No	DATE	DESCRIPTION	BY	CKD.
A	02-07-18	INITIAL RELEASE.	F.M.	M.B.

UNLESS OTHERWISE STATED
ALL MEASURES IN MILIMETERS.
GENERAL CAST TOLERANCES:
CT9 to ISO 8062.
CASTING RADII: 3 mm
DRAFT TAPERS: 2°

LINEAR MACHINING TOLERANCE:
X. ±0.25 mm
X.X ±0.10 mm

ANGULAR MACHINING TOLERANCE:
X. ±0.5°
X.X ±0.1°

NOM = Nominal; O/A = Overall; TYP = Typical; C/O = Clear Opening

FINISH: ALL CAST SURFACES TO BE PAINTED AS SPECIFIED.
FABRICATED COMPONENTS TO BE HOT DIP GALVANISED TO AS/NZS 4680.
LIGHT FILM OF GATIC SEALING GREASE TO BE APPLIED ON ALL MACHINED SURFACES.

GATIC PTY LTD
9-15 Radford Road, PO Box 312, Reservoir VIC. 3073
Ph- 03 9316 2666 Fax- 03 9315 0099 www.gatic.com.au

THIRD ANGLE PROJECTION

	BY	DATE
DESIGNED:	F.M.	02-07-18
DRAWN:	F.M.	02-07-18
CHECKED:	M.B.	02-07-18
APPROVED:	M.B.	02-07-18

CODE: GMMM3
SCALE: N.T.S.
FORMAT: A3
SHEET: 1 of 1

TITLE: GMMM3
225 HEAVY DUTY COVER & FRAME CONCRETE ENCASED
MATERIAL:
MASS: 98.9 kg
DRG. No: 5496
REV: A

© Copyright : Gatic Pty Ltd - 2018