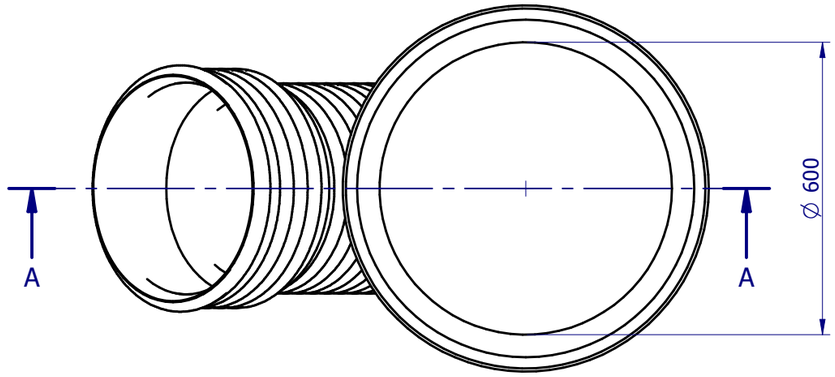

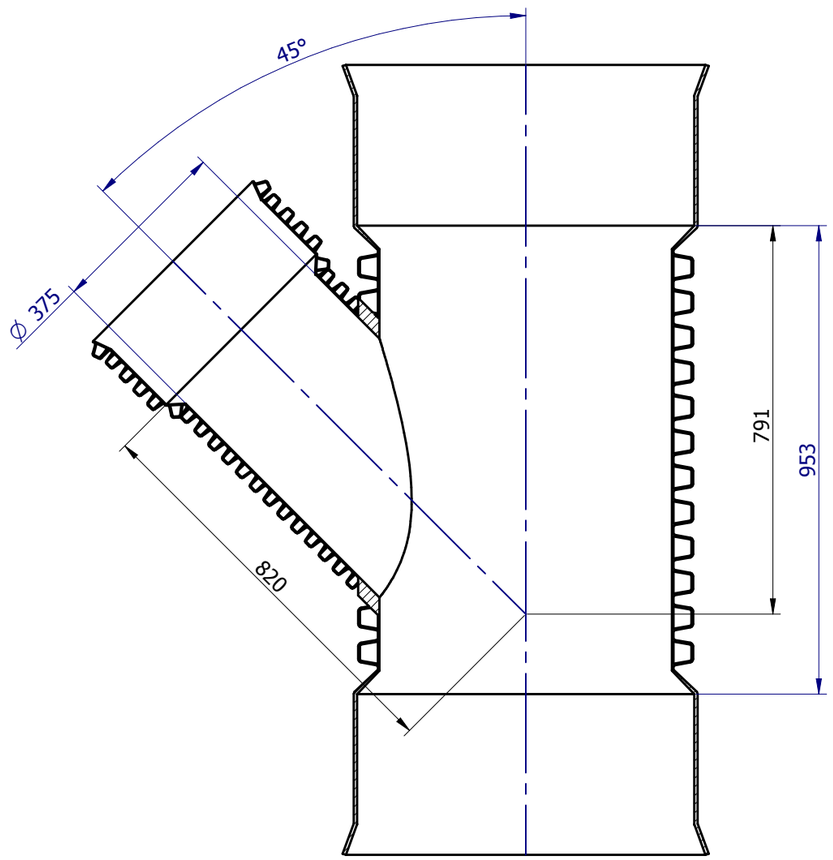

SECTION A-A

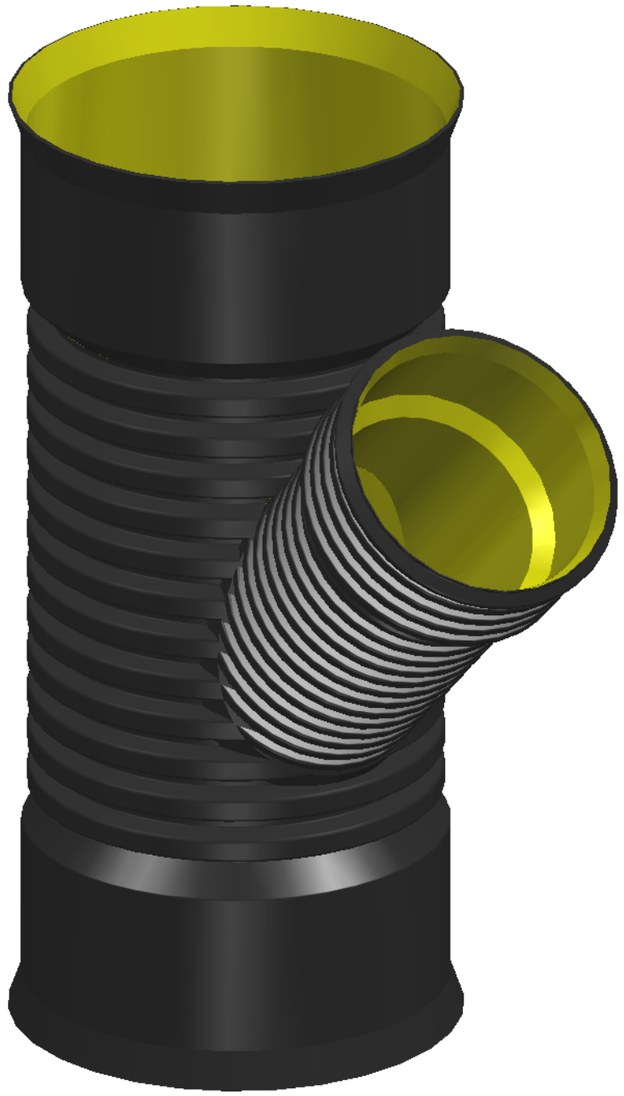

REVISIONS				
A	INITIAL RELEASE.	XX-XX-18	M.H.
REV	DESCRIPTION	DATE	APPROVED

UNLESS OTHERWISE STATED
NOM = Nominal
O/A = Overall
TYP = Typical
C/O = Clear Opening
All measures in millimeters.

This drawing and all information contained thereon are the exclusive property of Iplex Pipelines Pty Ltd. Unless specifically noted, this drawing and items shown on this drawing are subject to change at any time and without prior notice.

Measures are for reference purpose only.

© IPLEX PIPELINES PTY LTD

1300 0 IPLEX (47539)
www.iplex.com.au
info@iplexpipelines.com.au

iPLEX Pipelines

THIRD ANGLE PROJECTION

MASS: 29.197 kg
MATERIAL: POLYPROPYLENE
A3 - NTS
Sheet 1 of 1

DESCRIPTION: DN600 x DN375 x 45D BlackMAX™ Reducing Junction SC x SC x SC (PP Fab)

CODE: GR25603745

REV: A