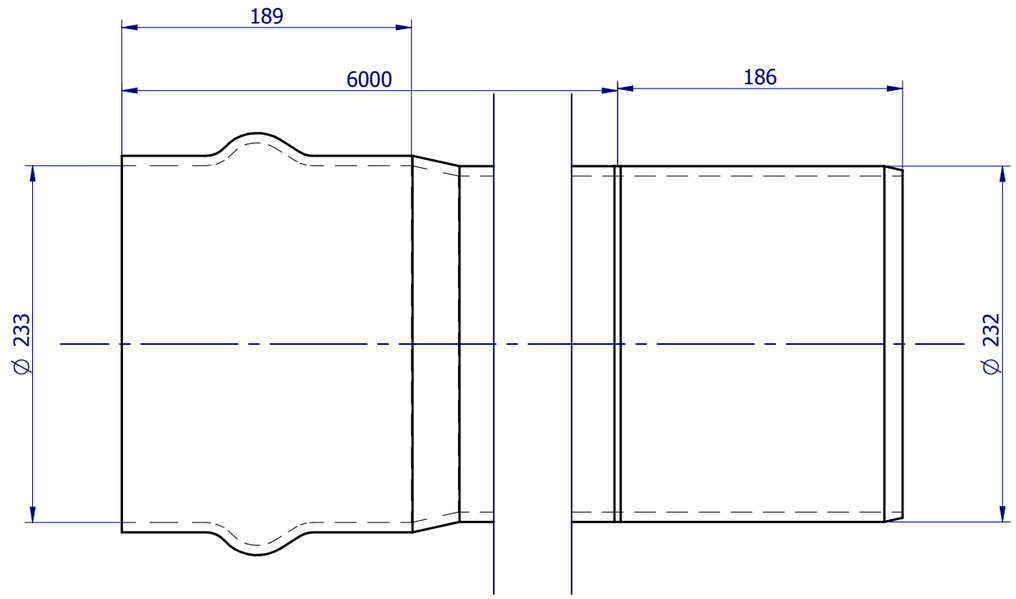

| REVISIONS | | | |
|---|---|---|---|
| A | INITIAL RELEASE. | XX-XX-18 | M.H. |
| REV | DESCRIPTION | DATE | APPROVED |

UNLESS OTHERWISE STATED

NOM = Nominal
O/A = Overall
TYP = Typical
C/O = Clear Opening

All measures in millimeters.

This drawing and all information contained thereon are the exclusive property of Iplex Pipelines Pty Ltd. Unless specifically noted, this drawing and items shown on this drawing are subject to change at any time and without prior notice.

Measures are for reference purpose only.

© IPLEX PIPELINES PTY LTD

1300 0 IPLEX (47539)
www.iplex.com.au
info@iplexpipelines.com.au

iPLEX Pipelines

THIRD ANGLE PROJECTION

MASS: 38.998 kg
MATERIAL: PVC
A3 - NTS
Sheet 1 of 1

DESCRIPTION: DN200 x 6m PN12.5 Apollo Cream® Series 2 PVC-M Pipe Rieber RRJ

CODE: PDRAC12200

REV: A