COMMERCIAL IN CONFIDENCE

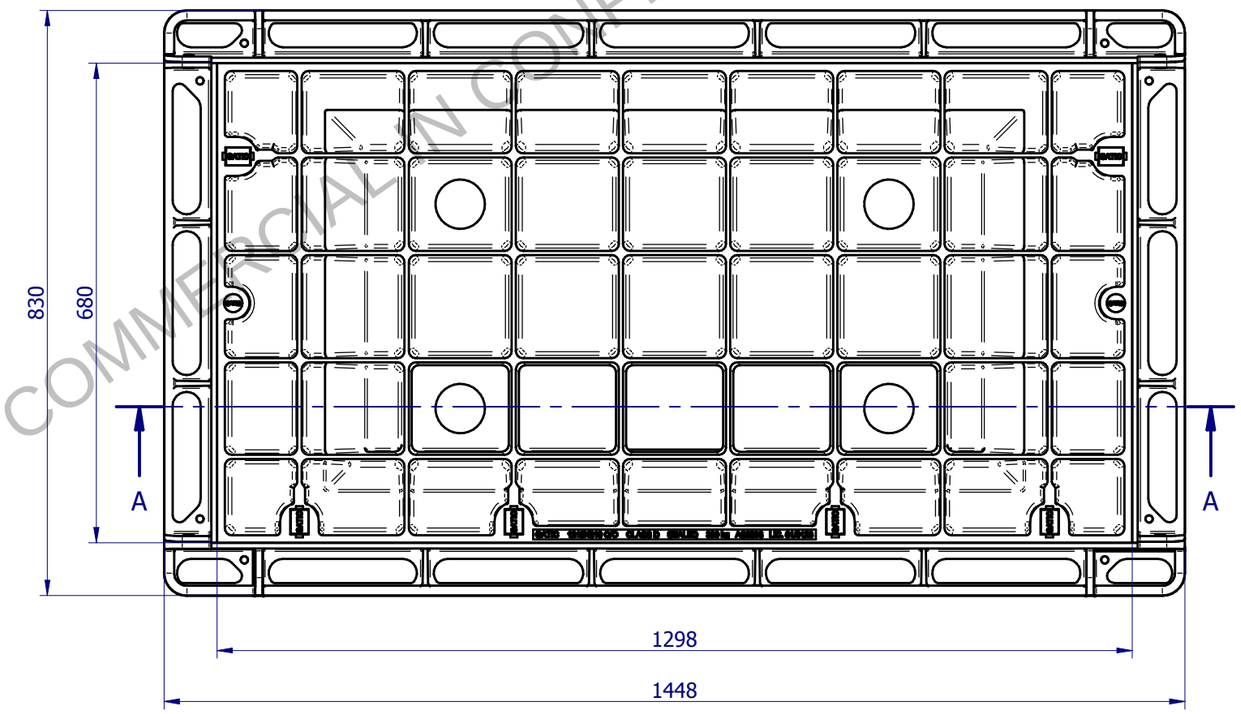

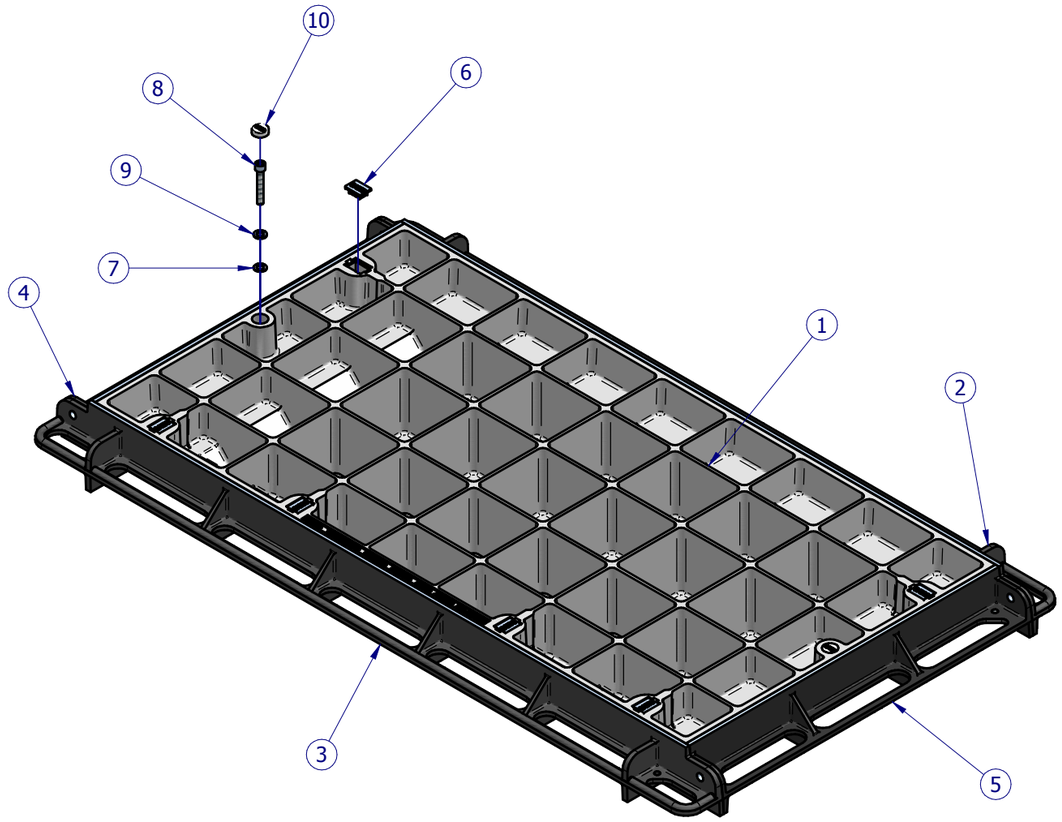

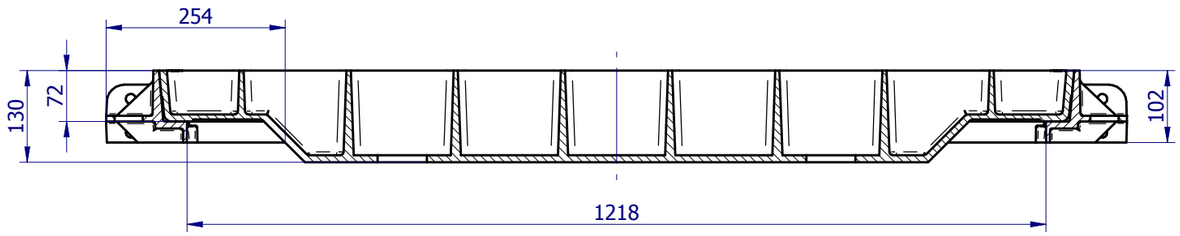

SECTION A-A

Item No.	Drwg No.	Rev	Title	Material	Qty	Mass
1	3828	A	1218x610 C/O Concrete Infill Cover Class D	Ductile Iron 500 - 7	1	162.3
2	4022	B	Side Bar 527mm	Ductile Iron 500-7	1	16.1
3	4021	B	Side Bar 527mm	Ductile Iron 500-7	1	19.4
4	4005	B	527 mm LH Side Bar	Ductile Iron 500-7	1	9.3
5	4006	B	680 mm RH Side Bar	Ductile Iron 500 - 7	1	9.2
6	1681	A	Plastic Keyhole Plug	UV Stabilized Nylon	6	0.0
7	2856	A	M10 Washer	Nylon, general purpose	2	0.0
8	2857	A	M10x65 Socket Head Cap Bolt	Stainless Steel, 304	2	0.1
9	2855	A	M10 Washer	Stainless Steel, 304	2	0.0
10	2854	C	Plastic Plug Ø26 mm	UV Stabilized Nylon	2	0.0

REVISION

No	DATE	DESCRIPTION	BY	CKD.
B	04-07-13	FRAME COMPONENTS REVISED.	S.S.	S.S.
A	03-11-10	INITIAL RELEASE.	F.M.	S.S.

UNLESS OTHERWISE STATED
ALL MEASURES IN MILIMETERS.
GENERAL CAST TOLERANCES:
CT9 to ISO 8062.
CASTING RADII: 3 mm
DRAFT TAPERS: 2°

LINEAR MACHINING TOLERANCE:
X. ±0.25 mm
X.X ±0.10 mm

ANGULAR MACHINING TOLERANCE:
X. ±0.5°
X.X ±0.1°

NOM = Nominal; O/A = Overall; TYP = Typical; C/O = Clear Opening

FINISH: ALL CAST SURFACES TO BE PAINTED BLACK.
FABRICATED COMPONENTS TO BE HOT DIP GALVANISED TO AS4680.
RUST PROOF SEALANT TO BE APPLIED ON ALL MACHINED SURFACES.

GATIC PTY LTD
9-15 Radford Road, PO Box 312, Reservoir VIC. 3073
Ph- 03 9316 2666 Fax- 03 9315 0099 www.gatic.com.au

THIRD ANGLE PROJECTION

	BY	DATE
DESIGNED:	S.S.	01-11-10
DRAWN:	F.M.	03-11-10
CHECKED:	S.S.	03-11-10
APPROVED:	H.B.	03-11-10

CODE: GM301C1261D
SCALE: N.T.S.
FORMAT: A3
SHEET: 1 of 1

TITLE: 1218 x 610 C/O CONCRETE INFILL COVER AND FRAME ASSEMBLY CLASS D
MATERIAL: -
MASS: 209.9 kg
DRG. No: 3829
REV: B

© Copyright : Gatic Pty Ltd - 2013